# INFRARED GAS SENSOR MIPEX-02-B-C-D.1 A (RX)

# USER MANUAL

**ESAT.100300.00.09 UM**



THE SOLE PROPERTY OF MGS TECHNOLOGY. ANY REPRODUCTION WITHOUT THE WRITTEN PERMISSION OF MGS TECHNOLOGY IS PROHIBITED.

INFORMATION CONTAINED IN THIS DOCUMENT IS THE SOLE PROPERTY OF MGS TECHNOLOGY. ANY REPRODUCTION IN PARTS OR AS A WHOLE WITHOUT THE WRITTEN PERMISSION OF MGS TECHNOLOGY IS PROHIBITED.

# Document revisions

| Rev. | Date | Common changes |
|---|---|---|
| 09 | May 05, 2025 | The addition of standard 60079-28 and the types of «op is» explosion protection |
| 08 | March 18, 2025 | Changing the brand logo |
| 07 | December 27, 2023 | Housing type 2 with side diffusion holes removed |
| 06 | September 29, 2023 | Updating standards |
| 05 | December 2, 2022 | Updating standards |
| 04 | March 2, 2022 | Updating standards |
| 3.1 | September 17, 2021 | Change of software version to 25.8 |
| 03 | March 26, 2020 | During operation, maximum surge current - 15 mA (was 10 mA)<br>High logic level for receiving line RxD is in range of + 2.4 ... + 2.7 V (it was + 2.4 ... + 3.4).<br>6.4 Getting started - the value is displayed as “-0001” (was “-1”)<br>Deleted Fig. 14. Connection diagram for MIPEX-02 via MIPEX-02/03 interface board.<br>Removed firmware 25.67 and 24.67. |
| 02 | February 21, 2020 | Adding to the document $CH_4$, $C_3H_8$ and $CH_4/CH_4+C_2H_6$ sensors, with stainless steel and polycarbonate Lexan type of housings. |
| 01 | July 25th, 2018 | Published version. |
| | | |



THE SOLE PROPERTY OF MGS TECHNOLOGY. ANY REPRODUCTION WITHOUT THE WRITTEN PERMISSION OF MGS TECHNOLOGY IS PROHIBITED.

# Table of contents

**1. Introduction ... 4**
1.1. List of abbreviations ... 4
1.2. List of terms ... 4
**2. Description ... 5**
**3. Technical specifications ... 7**
**4. Intrinsic safety ... 9**
**5. Handling precautions ... 10**
**6. Installation and service ... 11**
6.1. Preparation ... 11
6.2. Mounting ... 11
6.3. Electrical conditions ... 12
6.4. Getting started ... 16
6.5. Connecting multiple sensors to single UART line ... 16
**7. Storage and transportation ... 18**
**8. Warranty ... 19**
**9. Contacts ... 20**
**Appendix A. Sensor types and characteristics ... 21**
**Appendix B. Connection diagram ... 28**
**Appendix C. UART communication protocol ... 30**
Appendix C.1. General information ... 30
Appendix C.2. Communication protocol commands ... 31
Appendix C.2.1. Commands for requesting measured data ... 31
Appendix C.2.2. Commands for controlling operating mode ... 34
Appendix C.2.3. Commands for requesting factory settings and properties ... 34
Appendix C.2.4. Commands for sensor configuring and span calibrating ... 35
Appendix C.2.5. Commands for configuring net address ... 38
**Appendix D. Sensor configuration ... 39**
Appendix D.1. Zeroing and span calibration ... 39
Appendix D.2. Temperature dependence of zero adjustment ... 42
**Appendix E. Dust filter attaching ... 43**
**Appendix F. Troubleshooting ... 44**



THE SOLE PROPERTY OF MGS TECHNOLOGY. ANY REPRODUCTION WITHOUT THE WRITTEN PERMISSION OF MGS TECHNOLOGY IS PROHIBITED.

# 1. INTRODUCTION

This user manual (UM) is intended to describe design and operation of small-sized gas sensor MIPEX-02-B-C-D.1 A (RX) (hereinafter MIPEX-02 or sensor). UM contains basic technical data, recommendations and other information necessary for proper operation, maintenance and storage of sensor.

Sensor is intended for automatic continuous measurement of carbon dioxide or hydrocarbons concentration in hazardous areas atmosphere. Sensor can be used as a part of gas-analyzing equipment of groups I and II according to EN IEC 60079-0, EN 60079-11 in the explosion-hazardous zones of classes 0, 1, 2 according to IEC 60079-10-1, and Class I, Division 1, Group A, B, C, D according to UL Std. 913, UL 60079-0, UL 60079-11, UL 60079-28, CAN/CSA-C22.2 NO. 60079-0, CAN/CSA-C22.2 NO. 60079-11. All models are suitable for equipment with temperature classes T1 – T5 at maximum ambient temperature of 60 °C.

This user manual describes two firmware - 25.6 (used in hydrocarbon sensors) / 24.6 (used in $CO_2$ sensors) or an updated firmware 25.10. Firmware 25.6 /24.6 has an average current consumption is not more than 1.1 mA. Firmware 25.10 has a low current consumption is not more than 800 µA. Check which firmware is installed on the sensor is performed using the commands - <SREV?> or <ID?>.

**MGS TECHNOLOGY reserves the right to make changes to this manual, excluding intrinsically safe sensor parameters.**

## 1.1. List of abbreviations

- ADC – Analog-to-Digital Converter.
- LEL – Lower Explosive Limit.
- LED – Light Emitting Diode.
- CGM – Control Gas Mixture.
- NDIR – Non-Dispersive Infra-Red.
- UART – Universal Asynchronous Receiver/Transmitter.
- CRC – Cyclic Redundancy Check.
- IP – Ingress Protection.
- ASCII – American Standard Code for Information Interchange.
- Hex – hexadecimal.

## 1.2. List of terms

- Target gas is a gas, which sensor is intended to detect and measure its concentration.
- Calibration gas refers to CGM containing that gas, used for sensor calibration.

Any command stated in this UM as <X>, where X stands for a command text consisted of any number of characters, must be read and/or sent without the symbols “<” and “>”.


THE SOLE PROPERTY OF MGS TECHNOLOGY. ANY REPRODUCTION WITHOUT THE WRITTEN PERMISSION OF MGS TECHNOLOGY IS PROHIBITED.

# 2. DESCRIPTION

Sensor has several modifications for specific needs. They differ by housing types, photodiode and LED, calibration gases, interface types, measuring ranges etc. (see Appendix A).

Sensor is a smart integrated system and includes mirror optical system, photodiode and LED, signal amplifiers, microcontroller, current driver of the infrared LED, UART interface signal generator and supply forming voltage unit. Sensor microcontroller performs storage of unique sensor calibration constants, processing of measurement results and concentration of measured gas, and information exchange.

Sensor operating principle is based on NDIR technology, i.e. on selective infrared radiation absorption by gas molecules.

Infrared radiation from LED permeates through a measuring diffusion-type gas cell and arrives on signal and reference photodetectors, one of which detects radiation only in the wavelength range of infrared radiation absorbed by gases, while the other one detects radiation only in the wavelength range of 3.5…3.7 μm for hydrocarbons and 4.0…4.25 μm for carbon dioxide. Gas flowing through the cell absorbs the radiation of the operating wavelength ($\lambda_s$) and does not affect the radiation of the reference wavelength ($\lambda_{ref}$). Amplitude of the photodetector operating and reference signals, $U_s$ and $U_{ref}$, varies with the target gas concentration in accordance with the following equation:

$$\frac{U_s}{U_{ref}} = \exp(-[K(\lambda_s) - K(\lambda_{ref})] \cdot C \cdot L)$$

where:

$K(\lambda)$ – absorption coefficient at the predetermined wavelength;

$L$ – optical length of the cell;

$C$ – measured gas concentration;

$U_s$, $U_{ref}$ – photodetector signals amplitude.

Differential dual wavelength method allows eliminating of water vapor, optical elements contamination and other non-selective hindrances influence.

Target gases available for MIPEX-02 are listed in Table 1.



THE SOLE PROPERTY OF MGS TECHNOLOGY. ANY REPRODUCTION WITHOUT THE WRITTEN PERMISSION OF MGS TECHNOLOGY IS PROHIBITED.

**Table 1. Target gases for MIPEX-02 sensors**

| Classification code (see Appendix A) | Target gas | Analytical tasks description | Spectral characteristic maximum | Notes |
|---|---|---|---|---|
| 1 | $CH_4$ | Analyzing a gas mixture containing methane as the main component. | 3.31 μm | For optical elements sensitivity to other hydrocarbons, see Fig. 7. |
| 2 | $C_3H_8$ | Analyzing a gas mixture containing heavy hydrocarbons. The presence of methane is negligible. | 3.4 μm | For optical elements sensitivity to other hydrocarbons, see Fig. 8. |
| 3 | $CO_2$ | Analyzing the atmosphere (including of industrial facilities) containing carbon dioxide. | 4.2 μm | Sensor is selective to other gases. |
| 4 | $CH_4/CH_4+C_2H_6$ | The atmosphere of objects of group I (mine) in accordance with IEC 60079-29-1. | 3.27 μm | For optical elements sensitivity to other hydrocarbons, see Fig. 9. |


THE SOLE PROPERTY OF MGS TECHNOLOGY. ANY REPRODUCTION WITHOUT THE WRITTEN PERMISSION OF MGS TECHNOLOGY IS PROHIBITED.

# 3. TECHNICAL SPECIFICATIONS

**Table 2. General specifications (for available options see Appendix A)**

| | | |
|---|---|---|
| **Gas sampling method** | | Diffusion |
| **Operating principle** | | Non-Dispersive Infra-Red (NDIR) |
| **Target gas[1]** | | $CH_4$ |
| | | $CH_4/CH_4+C_2H_6$ |
| | | $C_3H_8$ |
| | | $CO_2$ |
| **Operating, storage and transportation conditions:** | **Relative humidity, %** | up to 98 |
| | **Atmospheric pressure, kPa** | 80…120 |
| | **Temperature[2], °C** | -55...+60 |
| **Temperature range, °C** | | -10…+40 |
| | | -40…+60 |
| | | -20…+50 |
| **Overall dimensions, mm** | | ⌀20.3×16.6<br>(without pins; housing types “1” and “3”)[3] |
| **Pins length, mm** | | 4.6 |
| **Warm-up time, sec** | | ≤ 120 |
| **Weight, g** | | 16.6 (housing type “1”) |
| | | 5.5 (housing type “3”) |
| | | 17.2 ($CO_2$, housing type “1”) |
| **Housing material** | | Stainless steel (housing type “1”) |
| | | Plastic Lexan™ (housing type “3”) |
| **Life time expectancy[4] (not less than), years** | | 10 |
| **Shelf life time (not less than), years** | | 8 |
| **IP rating** | | 20 (without dust filter) |
| | | 54 (if a dust filter provided by MGS TECHNOLOGY is applied) |

**Table 3. Measurement specifications**

[1] See Appendix A for details.

[2] Term “operating temperature” refers to ambient temperature, at which sensor operates and its intrinsic safety is ensured, but sensor readings variability stated in
Table 3 is provided only in specified temperature range (see Table 5 and Table 6).

[3] For information on housing types, see Appendix A.

[4] To provide metrological properties during sensor lifetime, zeroing and span calibration should be performed periodically, at least once in 30 months (see Appendix D.1).



THE SOLE PROPERTY OF MGS TECHNOLOGY. ANY REPRODUCTION WITHOUT THE WRITTEN PERMISSION OF MGS TECHNOLOGY IS PROHIBITED.

| | |
|---|---|
| **Measurement range, % vol.** | 0…1.5 ($CO_2$ or $C_3H_8$ sensors) |
| | 0…2.5 ($CH_4$ or $C_3H_8$ sensors) |
| | 0…5 ($CH_4$ or $CO_2$ sensors) |
| | 0…100 ($CH_4$ sensors) |
| **Basic variability (+20…+25 ºC)**[5] | ± 0.1% vol. or ± 5% of indication (whichever is greater) for $CH_4$ |
| | ± 0.05% vol. or ± 5% of indication (whichever is greater) for $C_3H_8$ and $CO_2$ |
| **Response time (T90) without dust filter, sec** | ≤ 15 ($C_mH_n$, housing “1” and “3”) |
| | ≤ 30 ($CO_2$, housing “1”) |
| **Response time (T90) when dust filter provided by MGS TECHNOLOGY is installed (see Appendix E), sec** | ≤ 30 ($C_mH_n$, housing “1” and “3”) |
| | ≤ 60 ($CO_2$, housing “1”) |

**Table 4. Electrical specifications, marking and standards compliance**

| | |
|---|---|
| **Operating supply voltage, VDC (min…max)** | +3.0…+5.0 |
| **Communication interface** | UART |
| **Average current, mA** | ≤ 1.1 |
| **Marking and standards compliance** | The details of certification are specified in Appendix B.<br>Sensor is suitable for use within end equipment with temperature classes T1-T5 at maximum ambient temperature of +60 °C.<br>**Ex ia op is I Ma/Ex ia op is IIC Ga**<br>According to standards:<br>IEC 60079-0<br>IEC 60079-11<br>IEC 60079-28<br><br>**C I, Div 1, Gr A, B, C, D;**<br>**C I, Zone 0, AEx ia op is IIC Ga; Ex ia op is IIC Ga**<br>According to standards:<br>UL 913<br>UL 60079-0<br>UL 60079-11<br>UL 60079-28<br>CSA C22.2 No. 60079-0<br>CSA C22.2 No. 60079-11<br><br>**I M1/II 1 G Ex ia op is I Ma/Ex ia op is IIC Ga**<br>According to standards:<br>EN IEC 60079-0<br>EN 60079-11<br>EN IEC 60079-28 |

[5] For variability in the whole operating temperature range for any sensor modification, see Table 6.


THE SOLE PROPERTY OF MGS TECHNOLOGY. ANY REPRODUCTION WITHOUT THE WRITTEN PERMISSION OF MGS TECHNOLOGY IS PROHIBITED.

# 4. INTRINSIC SAFETY

Sensor's intrinsic safety is provided by:

- limiting parameters of its electrical circuits to intrinsically safe values in accordance with EN IEC 60079-0;
- providing the required electrical clearances and creepage paths in accordance with EN 60079-11;
- insulation between intrinsically safe circuit and sensor housing, which withstands test voltage of 500 V in accordance with EN 60079-11.
- the continuous radiation power limit of the optical element used in the sensor is less than 15 mW, is a safe optical radiation and meets the requirements of EN 60079-28

**Combined intrinsically safe sensor circuits parameters:**

- IECEx/ATEX: $U_i$ = 5.0 V, $I_i$ = 450 mA, $P_i$ = 0.25 W, $C_i$ = 38.8 μF, $L_i$ = 0 mH.
- CAN/CSA: $V_{max}$ = 5.0 V, $I_{max}$ = 450 mA, $P_{max}$ = 0.25 W, $C_i$ = 38.8 μF, $L_i$ = 0 mH.

It is allowed to connect sensor only to intrinsically safe circuits with the rated direct current output voltage ($U_0$) within the range of +3.0…+5.0 V, with the output power ($P_0$) range of 0.02…0.25 W in accordance with EN IEC 60079-0, EN 60079-11, EN 60079-14 and whose parameters conform MIPEX-02 intrinsic safety values pointed above. Current provided by power supply unit must be 25 mA ≤ $I_0$ ≤ 450 mA.


THE SOLE PROPERTY OF MGS TECHNOLOGY. ANY REPRODUCTION WITHOUT THE WRITTEN PERMISSION OF MGS TECHNOLOGY IS PROHIBITED.

# 5. HANDLING PRECAUTIONS

- Do not use damaged sensor. It must be repaired only by personnel authorized by manufacturer.
- Keep sensor out of contact with aggressive substances e.g. acidic environments, which can react with metals, as well as solvents, which may affect polymeric materials.
- Diffusion holes of sensor should be protected against ingress of dust and sprayed materials.
- Sensor is not intended to measure target gas concentration contained in fluids.
- Maximum allowable pressure for housing type “1”: on the central part of sensor reflecting cover or on sensor side surface – 2 MPa, on sensor upper edge – 100 MPa.
- Maximum allowable pressure for housing type “3”: on the central part of sensor reflecting cover or to sensor side surface – 20 kPa, on sensor upper edge – 2 MPa.
- Sensor updates information about concentration every 1.28 ± 0.065 seconds. Sending any command more often than one time per second (1 Hz) may reduce sensor accuracy.
- Sensor housing type “3” may accumulate an electrostatic charge. Thus, there is risk of electrostatic discharge. Clean only using a damp cloth.
- Correct measurement is provided when ambient temperature changes not faster than 0.6 °C/min.
- Covering diffusion holes of sensor increases its response time (T90).
- When operating sensor, observe conditions stated in Table 2 and Table 4.
- Inspection and maintenance should be carried out by suitably trained personnel in accordance with the applicable code of practice (e.g. EN 60079-17).
- Persons, who have studied this UM, must be briefed on safety precautions when operating electrical equipment intended for use in explosive areas in due course.
- When dealing with cylinder containing gas mixture under pressure, it is necessary to follow the safety regulations. Dumping of CGM into the work area is not allowed.
- There is no risk of pollution and negative impact on human health. Sensor does not contain any harmful substances that may be released during its normal operation.
- It is strictly prohibited to remove label from sensor or to damage marking information in any way.


THE SOLE PROPERTY OF MGS TECHNOLOGY. ANY REPRODUCTION WITHOUT THE WRITTEN PERMISSION OF MGS TECHNOLOGY IS PROHIBITED.

# 6. INSTALLATION AND SERVICE

- Sensor housing type “3” may accumulate an electrostatic charge. Thus, there is risk of electrostatic discharge. Clean only using a damp cloth. Note this during installation and use of sensor in the end-user equipment.
- Sensor modifications in housing type “1” has been tested and was found to have maximum capacitance of ungrounded metal frame equal 17.4 pF.
- Sensor must be mounted using sockets only, as soldering the pins may damage sensor.
- It is not allowed to use excessive pressure on sensor housing. Maximum allowable pressure for housing type “1”: on the central part of sensor reflecting cover or on sensor side surface – 2 MPa, on sensor upper edge – 100 MPa. Maximum allowable pressure for housing type “3”: on the central part of sensor reflecting cover or on sensor side surface – 20 kPa, on sensor upper edge – 2 MPa.
- Span calibration is necessary during sensor’s initial installation into gas analyzers and during preparation for the equipment checking. Manual zeroing must be performed after prolonged storage without power supply, after transportation as well as after dust filter is applied (see Appendix D.1).
- It is required to perform span calibration at least once in 30 months.

## 6.1. Preparation

- If sensor has been kept in transport containers at temperatures below zero centigrade, leave it at +10…+35 °C for not less than one hour.
- Remove the packaging. Check presence of the certification markings; make sure there are no mechanical injuries on sensor surfaces.

## 6.2. Mounting

Use intrinsically safe circuit connections represented in Appendix B.

It is recommended to use the following sockets or similar for sensor mounting:

- Cambion 450-3729-01-06-00;
- Harwin H3183-05;
- Harwin H3182-05

Sensor pinout is shown in Appendix A,

Table 7.

End user instrument design has to provide that sensor is free of excessive pressure on its housing, ingress of dust, dirt and condensed moisture, as these factors may affect the accuracy of measurement. It is recommended to use dust filter (available as an option; see Appendix E). Filter has to be checked regularly and replaced when fouling is significant.


THE SOLE PROPERTY OF MGS TECHNOLOGY. ANY REPRODUCTION WITHOUT THE WRITTEN PERMISSION OF MGS TECHNOLOGY IS PROHIBITED.

## 6.3. Electrical conditions

- For firmware releases 25.10 - during first 0.01 seconds after power up, sensor consumes up to 55 mA, and then during 0.1 second average current consumption up to 14 mA (see Fig. 1). After that sensor switches to the normal current consumption mode.
- For firmware releases 25.6 / 24.6 - during first 0.1 seconds after power up, sensor consumes up to 25 mA, and then during one second average current consumption is about 10 mA. After that sensor switches to the normal current consumption mode.
- During operation, MIPEX-02 has pulsed current consumption. Pulse repetition period is 10 ± 20% ms for firmware releases 25.6/24.6 and 80 ± 20% ms for firmware releases 25.10 (depends on ambient temperature).
- For firmware releases 25.10 - during operation, maximum surge current is 17 mA for 20 microseconds (see Fig. 2). Average current consumption is not more than 330 µA when UART is active (see Fig. 3). For power consumption of sensor connected via barrier see Fig. 4 and Fig. 5.
- For firmware releases 25.6 / 24.6 - during operation, maximum surge current is 15 mA. Average current consumption is not more than 1 mA.
- For firmware releases 25.6 / 24.6 - average current consumption may increase up to 10 mA over about 60 ms when UART is active. Pulse repetition period is increased by the time of data processing on UART.

Use intrinsically safe circuit connections represented in Appendix B.

Sensor power supply has to follow requirements of IEC 60079-0 and IEC 60079-11, with rated output range of intrinsically safe DC voltage ($U_0$) of +3.0…+5.0 V, with rated power range ($P_0$) of 0.02…0.25 W. Current provided by power supply unit must be 25 mA < $I_0$ ≤ 450 mA.

End-user equipment UART transceiver should meet the requirements of standards IEC 60079-0, IEC 60079-11.

Sensor UART transceiver communication properties are:

- High logic level for transmitting line TxD is in range of +2.4…+2.7 V;
- High logic level for receiving line RxD is in range of +2.4…+2.7 V;
- Low logic level is in range of 0…+0.8 V;
- Maximum output current of UART is not more than 25 mA.


THE SOLE PROPERTY OF MGS TECHNOLOGY. ANY REPRODUCTION WITHOUT THE WRITTEN PERMISSION OF MGS TECHNOLOGY IS PROHIBITED.

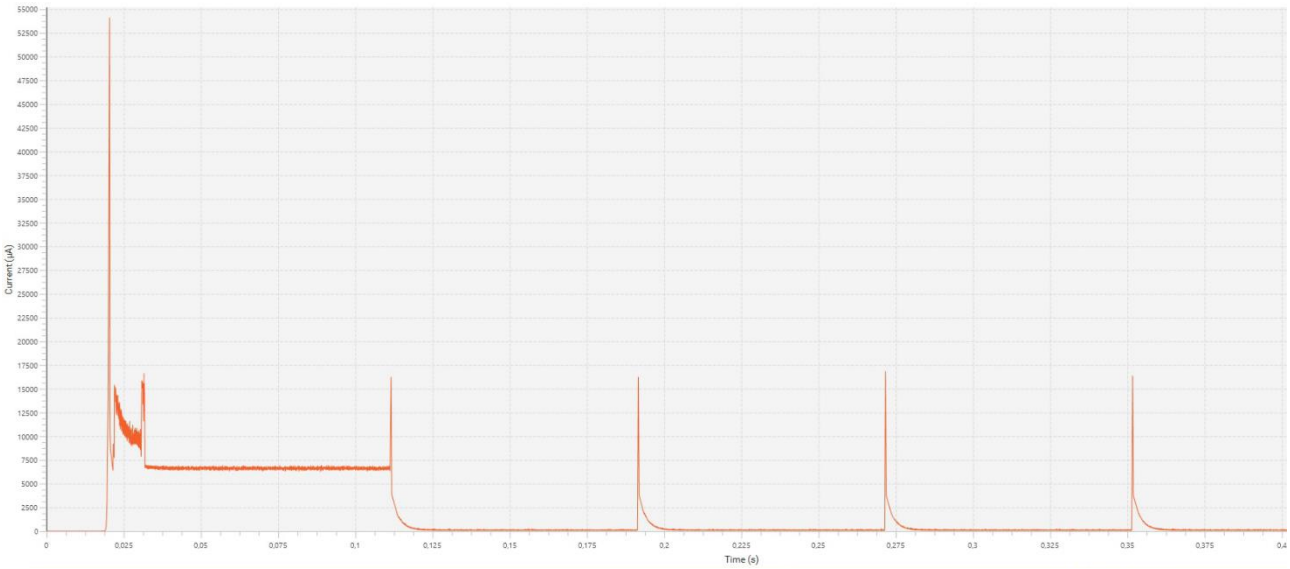


**Fig. 1. Typical current consumption waveform after power up**

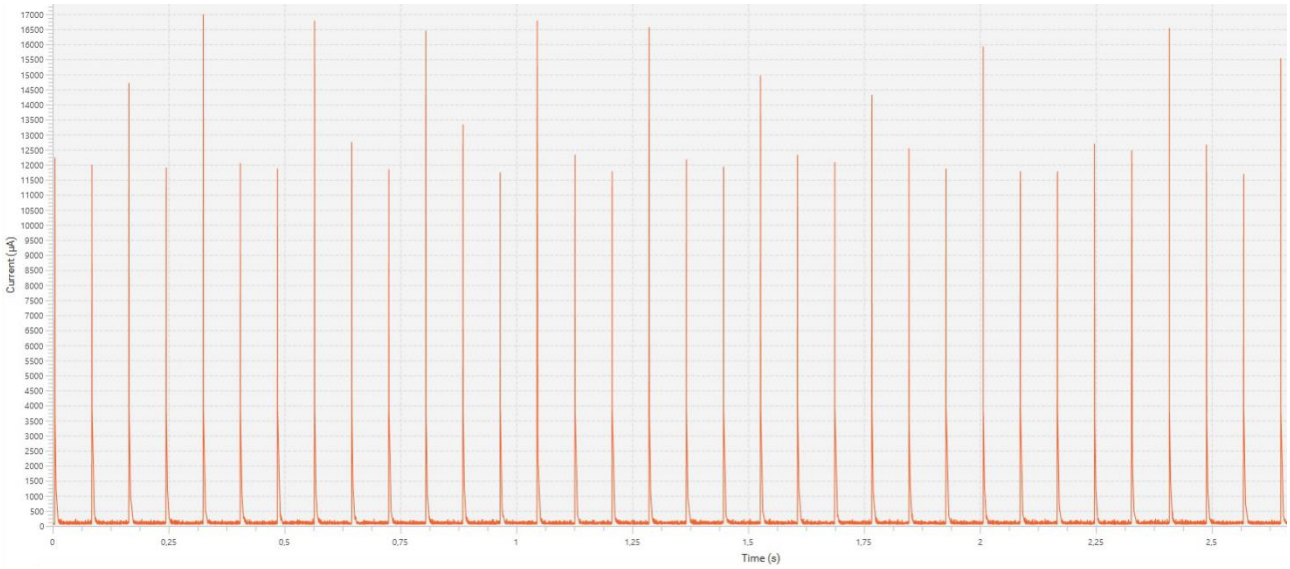


**Fig. 2. Typical current consumption waveform**



THE SOLE PROPERTY OF MGS TECHNOLOGY. ANY REPRODUCTION WITHOUT THE WRITTEN PERMISSION OF MGS TECHNOLOGY IS PROHIBITED.

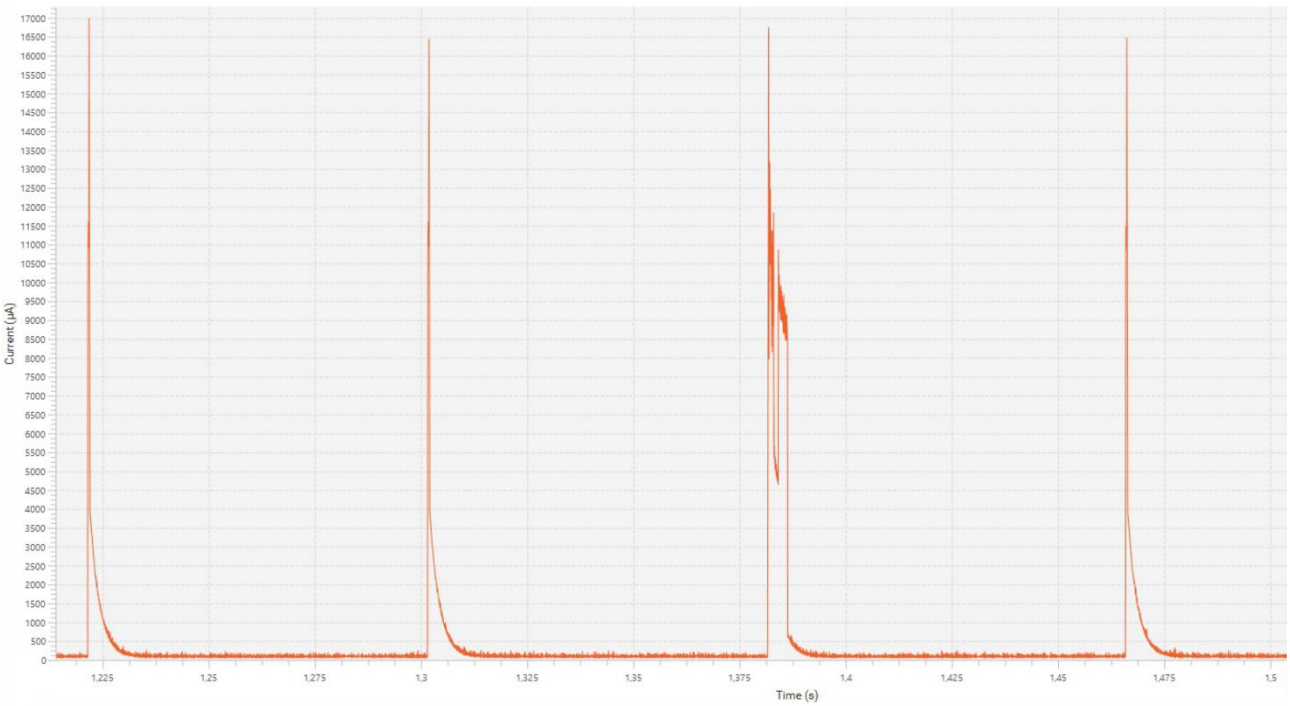


**Fig. 3. Typical current consumption waveform when UART is active (<@> command)**

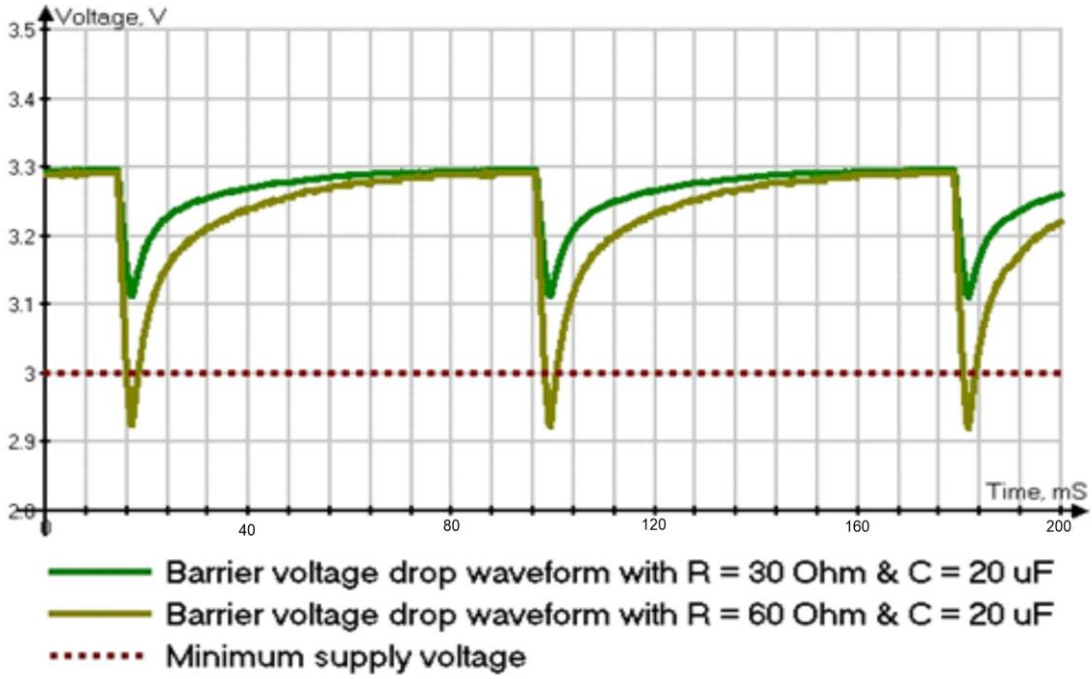


**Fig. 4. Typical barrier voltage drop waveform (3.3 V input)**



THE SOLE PROPERTY OF MGS TECHNOLOGY. ANY REPRODUCTION WITHOUT THE WRITTEN PERMISSION OF MGS TECHNOLOGY IS PROHIBITED.

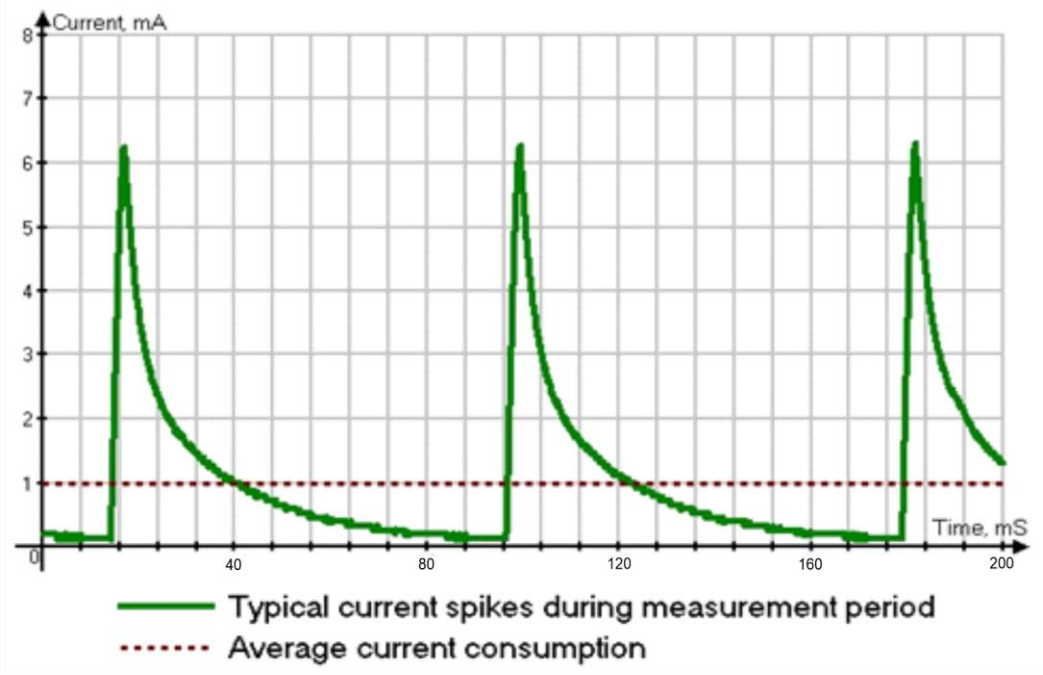


**Fig. 5. Typical current consumption waveform (3.3 V input, R = 30 Ohm, C = 20 µF)**



THE SOLE PROPERTY OF MGS TECHNOLOGY. ANY REPRODUCTION WITHOUT THE WRITTEN PERMISSION OF MGS TECHNOLOGY IS PROHIBITED.

## 6.4. Getting started

- During first 40 seconds after the power is up sensor does not return the measured concentration value (the value is displayed as “-0001”, hex: “8001”, see Table 13).
- When the measurement range is exceeded, concentration value is displayed as “32767” (hex: “7FFF”).
- Sensor updates information about concentration every 1.28 ± 0.065 seconds. Sending any command more often than one time per second (1 Hz) may reduce sensor accuracy.

Switching on/off sensor is performed automatically upon feeding/disconnecting power supply.

After sensor is installed into end-user equipment check its status by sending <DATAE2> command via UART interface:

- for <DATAE2> command description see Appendix C.2.1;
- for status bytes description and recommendations see Table 12.

Sensor span calibration and zeroing should be performed next. Methods of sensor span calibration and zeroing are given in Appendix D.1.

## 6.5. Connecting multiple sensors to single UART line

It is possible to connect to single UART line up to 256 sensors assigning them net addresses in range 00…FF. Sensor has net address 00 by default. To view and change its net address use the following commands: <!**>, <NETON>, <NETOFF>, <%AABB>. For commands description see Appendix C.2.5.

If sensor is used in combination with other devices on single UART line, any command text must contain sensor’s address prefix as “#AA”, where AA stands for sensor’s net address in hexadecimal format in range 00…FF. Thus, command text must be sent as <#AAX>, where X stands for command text containing any number of characters in accordance with sensor communication protocol (see Appendix C). Connection diagram of multiple sensors to single UART line is shown on Fig. 6.


THE SOLE PROPERTY OF MGS TECHNOLOGY. ANY REPRODUCTION WITHOUT THE WRITTEN PERMISSION OF MGS TECHNOLOGY IS PROHIBITED.

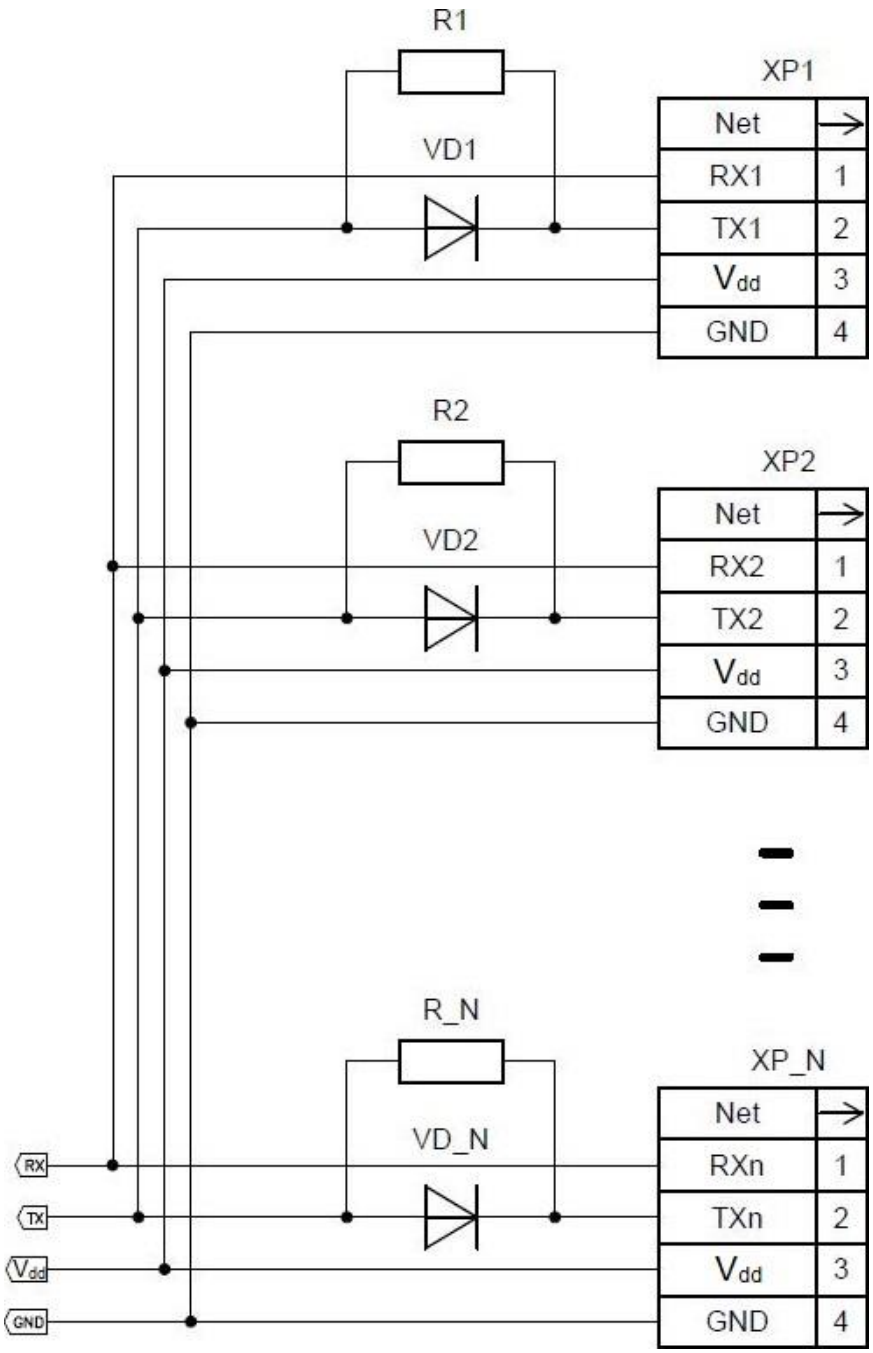


**Fig. 6. Connection diagram of multiple sensors to single UART line**

Resistors are calculated as follows:

1. Determine the quantity of sensors $N$ that should be connected to single UART line.
2. Determine forward voltage $U_f$ of Schottky diodes (VD_N).
3. Calculate the minimum allowed resistance $R_{min}$ by using the following equation:

$$R_{min} = \frac{U_h - U_f}{I_{out}} \times (N - 1)\,,$$

where:

$U_h$ – maximum high logic level voltage (2.7 V);

$I_{out}$ – maximum output current of sensor microcontroller (25 mA).



THE SOLE PROPERTY OF MGS TECHNOLOGY. ANY REPRODUCTION WITHOUT THE WRITTEN PERMISSION OF MGS TECHNOLOGY IS PROHIBITED.

# 7. STORAGE AND TRANSPORTATION

Transportation can be done by all means of transportation in covered vehicles as well as in a heated pressurized plane compartments in accordance with the rules of cargoes transportation actual for the respective type of transportation.

Sensor in manufacturer's package should be kept in supplier and customer's storages under storage conditions specified in Table 2. Ambient atmosphere should be free of any harmful impurities that can cause corrosion.


THE SOLE PROPERTY OF MGS TECHNOLOGY. ANY REPRODUCTION WITHOUT THE WRITTEN PERMISSION OF MGS TECHNOLOGY IS PROHIBITED.

# 8. WARRANTY

Manufacturer guarantees sensor compliance with specifications and requirements stated in this UM if customer follows operating, transportation and storage terms.

During warranty period, manufacturer replaces or repairs for free all its products that do not operate because of production fault.

Warranty period is 24 months since product is shipped to customer. Shipment date is registered in the ESAT.100300.00 PS manufacturer's certificate.

Manufacturer is not responsible for sensor fault and discontinues warranty in following cases:

- if the rules and conditions of operation, transportation and storage stated in this UM and in sensor datasheet were violated;
- if sensor has marks of unauthorized repair attempts;
- if any mechanical damage occurs and/or if any damage is caused by exposure to extremely high or low temperatures, corrosion, oxidation, ingression of any foreign objects, materials, liquids, insects;
- if sensor was damaged by using connection circuit that does not comply with requirements stated in this UM;
- if damage is caused by force majeure, accident, intentional or careless actions of the customer or third parties;
- if damage (or fault) is caused by installing, editing or damaging sensor firmware and/or by making changes to the firmware settings using service codes;
- if damage (or fault) is caused by the fact of power and signal cables do not meet the standard or technical regulations and/or by electromagnetic interferences exceeding permissible according to EN 60079-29-1.

Replacement or repairs of faulty sensor does not extend initial warranty period.

Manufacturer is not responsible for any possible damage directly or indirectly caused by sensor to people and property in case it is a result of improper usage, storage and transportation or due to intentional or careless actions of the customer and/or third parties.

Risks and costs of transportation and packaging as well as other contingencies concerning product return to manufacturer are carried out by the customer.

For warranty information or additional assistance, please contact support service (see Chapter 9).



THE SOLE PROPERTY OF MGS TECHNOLOGY. ANY REPRODUCTION WITHOUT THE WRITTEN PERMISSION OF MGS TECHNOLOGY IS PROHIBITED.

# 9. CONTACTS

**MGS TECHNOLOGY DOO BEOGRAD**
**Bulevar Patrijarha Germana 91, Beli Potok, Beograd, Republic of Serbia**
**info@mgs-technology.com**
**Tel/fax: +381 695 526 116**


THE SOLE PROPERTY OF MGS TECHNOLOGY. ANY REPRODUCTION WITHOUT THE WRITTEN PERMISSION OF MGS TECHNOLOGY IS PROHIBITED.

# APPENDIX A. SENSOR TYPES AND CHARACTERISTICS

**MIPEX-02-B-C-D.1 A (RX)**

**RX-code:**
**R** – calibration gas and measurement range
**X** – temperature range

**Pins length:**
**A** – 4.6 mm

**Interface:**
**1.** UART, 4 pins

**Housing type:**
**1.** stainless steel
**3.** plastic LEXAN™

**Electrical equipment group according to ATEX directive 2014/34/EU: I** or **II**

**Target gas:**
**1.** $CH_4$
**2.** $C_3H_8$, $C_mH_n$
**3.** $CO_2$
**4.** $CH_4/CH_4+C_2H_6$

***** See Table 5 for details.

** See Table 6 for details.



THE SOLE PROPERTY OF MGS TECHNOLOGY. ANY REPRODUCTION WITHOUT THE WRITTEN PERMISSION OF MGS TECHNOLOGY IS PROHIBITED.

**Table 5. Metrological properties of sensor (RX-code)**

| Part number | Target gas[6] | Calibration gas | Meas. range, % vol. | Temp. range, °C | RX |
|---|---|---|---|---|---|
| MIPEX-02-1-I-D.1 X (00) | $CH_4$ | $CH_4$ | 0…2.5 | -10…+40 | 00 |
| MIPEX-02-1-I-D.1 X (10) | | | 0…5 | | 10 |
| MIPEX-02-1-I-D.1 X (20) | | | 0…100 | | 20 |
| MIPEX-02-1-II-D.1 X (01) | | | 0…2.5 | -40…+60 | 01 |
| MIPEX-02-1-II-D.1 X (11) | | | 0…5 | | 11 |
| MIPEX-02-1-II-D.1 X (21) | | | 0…100 | | 21 |
| MIPEX-02-1-II-D.1 X (02) | | | 0…2.5 | -20…+50 | 02 |
| MIPEX-02-1-II-D.1 X (12) | | | 0…5 | | 12 |
| MIPEX-02-1-II-D.1 X (22) | | | 0…100 | | 22 |
| MIPEX-02-1-II-D.1 X (61) | | $C_3H_8$ | 0…1.5 | -40…+60 | 61 |
| MIPEX-02-1-II-D.1 X (71) | | | 0…2.5 | | 71 |
| MIPEX-02-1-II-D.1 X (62) | | | 0…1.5 | -20…+50 | 62 |
| MIPEX-02-1-II-D.1 X (72) | | | 0…2.5 | | 72 |
| MIPEX-02-2-II-D.1 X (61) | $C_3H_8$ | $C_3H_8$ | 0…1.5 | -40…+60 | 61 |
| MIPEX-02-2-II-D.1 X (71) | | | 0…2.5 | | 71 |
| MIPEX-02-2-II-D.1 X (62) | | | 0…1.5 | -20…+50 | 62 |
| MIPEX-02-2-II-D.1 X (72) | | | 0…2.5 | | 72 |
| MIPEX-02-3-I-D.1 A (30) | $CO_2$ | $CO_2$ | 0…1.5 | -10…+40 | 30 |
| MIPEX-02-3-II-D.1 A (32) | | | | -20…+50 | 32 |
| MIPEX-02-3-I-D.1 A (40) | | | 0…5 | -10…+40 | 40 |
| MIPEX-02-3-II-D.1 A (42) | | | | -20…+50 | 42 |
| MIPEX-02-4-I-D.1 X (00) | $CH_4$/ $CH_4$+$C_2H_6$ | $CH_4$ | 0…2.5 | -10…+40 | 00 |
| MIPEX-02-4-I-D.1 X (10) | | | 0…5 | | 10 |
| MIPEX-02-4-I-D.1 X (20) | | | 0…100 | | 20 |
| MIPEX-02-4-II-D.1 X (01) | | | 0…2.5 | -40…+60 | 01 |
| MIPEX-02-4-II-D.1 X (11) | | | 0…5 | | 11 |
| MIPEX-02-4-II-D.1 X (21) | | | 0…100 | | 21 |
| MIPEX-02-4-II-D.1 X (02) | | | 0…2.5 | -20…+50 | 02 |
| MIPEX-02-4-II-D.1 X (12) | | | 0…5 | | 12 |
| MIPEX-02-4-II-D.1 X (22) | | | 0…100 | | 22 |

[6] Typical sensor sensitivity to other hydrocarbons is shown on Fig. 7, Fig. 8 and Fig. 9.



THE SOLE PROPERTY OF MGS TECHNOLOGY. ANY REPRODUCTION WITHOUT THE WRITTEN PERMISSION OF MGS TECHNOLOGY IS PROHIBITED.

**Table 6. Basic sensor readings variability[7]**

| Calibration gas | Readings variability within a temperature range | Additional variability due to pressure | Additional variability due to humidity |
|---|---|---|---|
| $CH_4$ | ±0.1% vol. or ±5% of indication (whichever is greater) within the range of +20…+25 °C; | ±0.2% vol. or ±30% of indication (whichever is greater) at 100 kPa (test: 80 kPa, 100 kPa, 120 kPa) | ±0.2% vol. or ±15% of indication (whichever is greater) at 40 °C (test: 20% RH, 50% RH, 90% RH) |
| | ±0.2% vol. or ±10% of indication (whichever is greater) within the range of -10…+20 °C and +25…+40 °C; | | |
| | ±0.4% vol. or ±20% of indication (whichever is greater) within the range of -40…-10 °C and +40…+60 °C. | | |
| $C_3H_8$ | ±0.05% vol. or ±5% of indication (whichever is greater) within the range of +20…+25 °C; | ±0.1% vol. or ±30% of indication (whichever is greater) at 100 kPa (test: 80 kPa, 100 kPa, 120 kPa) | ±0.1% vol. or ±15% of indication (whichever is greater) at 40 °C (test: 20% RH, 50% RH, 90% RH) |
| | ±0.1% vol. or ±10% of indication (whichever is greater) within the range of -10…+20 °C and +25…+40 °C; | | |
| | ±0.2% vol. or ±20% of indication (whichever is greater) within the range of -40…-10 °C and +40…+60 °C. | | |
| $CO_2$ | ± 0.05% vol. or ± 5% of readings (whichever is greater) within the range of +20…+25 °C; | ± 0.1% vol. or ± 40% of readings (whichever is greater) at 100 kPa (tested at 80 kPa, 100 kPa, 120 kPa) | ± 0.1% vol. or ± 15% of readings (whichever is greater) at 40 °C (tested at 20% RH, 50% RH, 90% RH) |
| | ± 0.1% vol. or ± 10% of readings (whichever is greater) within the range of -10…+20 °C and +25…+40 °C; | | |
| | ± 0.2% vol. or ± 20% of readings (whichever is greater) within the range of -20…-10 °C and +40…+50 °C. | | |

[7] The table shows basic variability of MIPEX-02 sensor readings. For each sensor modification, readings variability stated in Table 6 is provided within a temperature range determined by a sensor RX-code (see Table 5).



THE SOLE PROPERTY OF MGS TECHNOLOGY. ANY REPRODUCTION WITHOUT THE WRITTEN PERMISSION OF MGS TECHNOLOGY IS PROHIBITED.

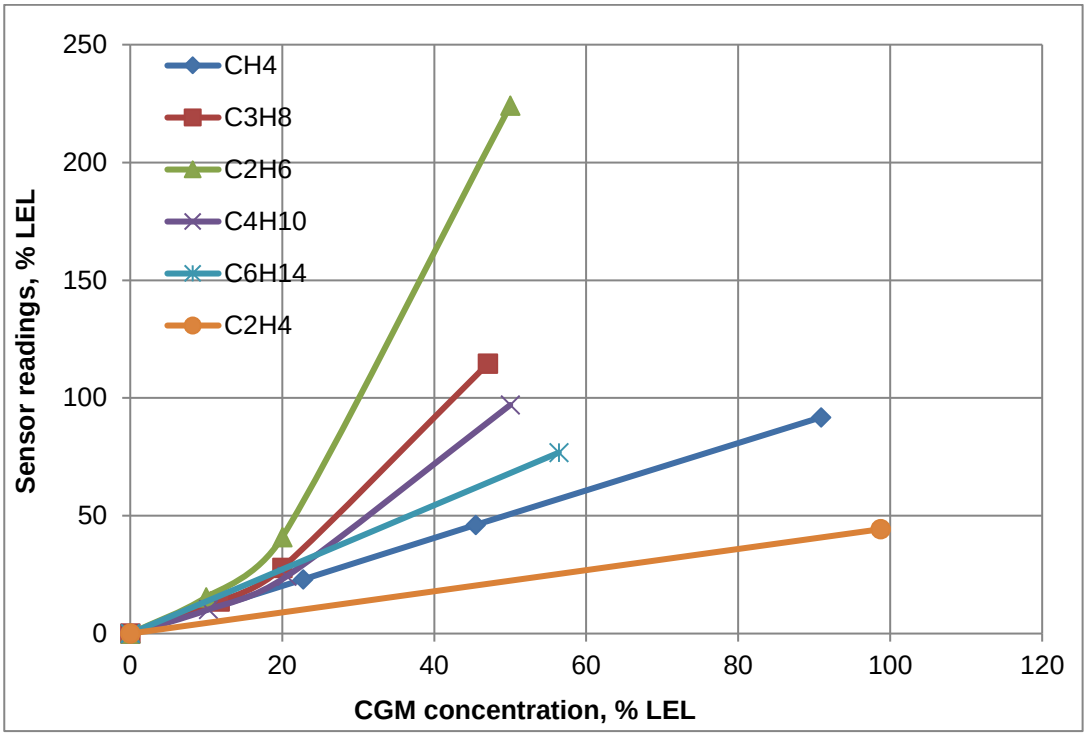


**Fig. 7. Typical sensitivity of MIPEX-02-1-X-X.1 X (target and calibration gas is $CH_4$) to other hydrocarbons**

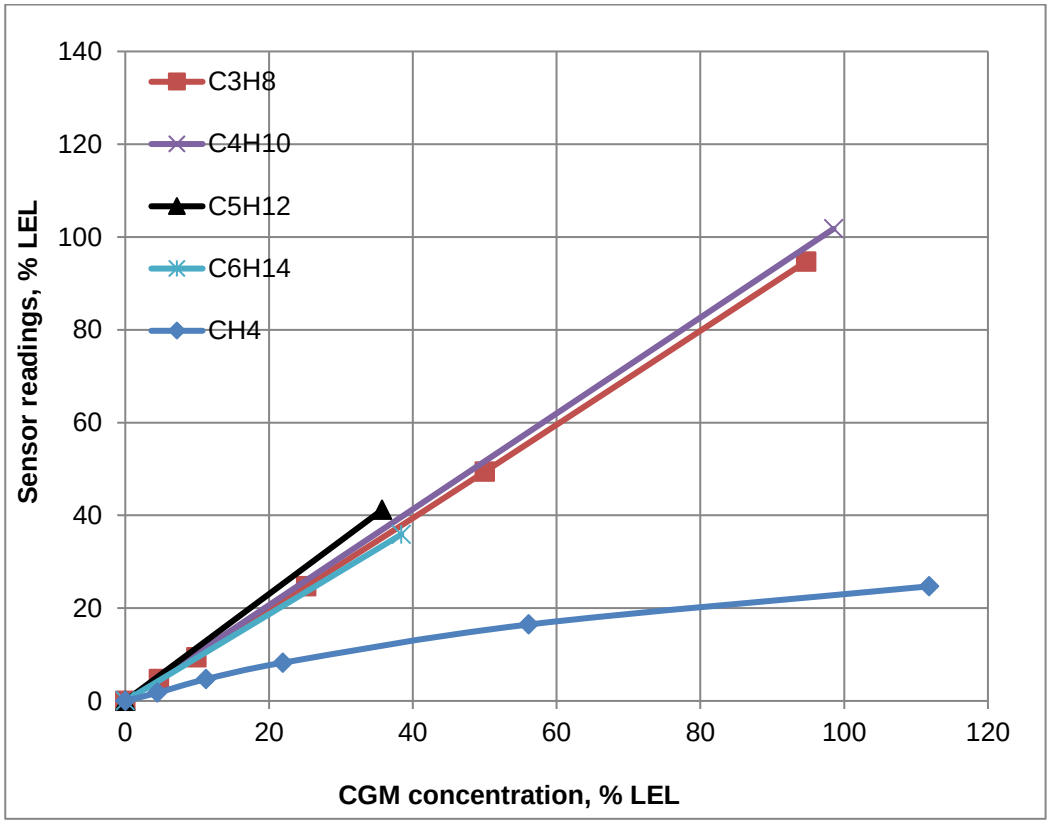


**Fig. 8. Typical sensitivity of MIPEX-02-2-X-X.1 X (target and calibration gas is $C_3H_8$) to other hydrocarbons**



THE SOLE PROPERTY OF MGS TECHNOLOGY. ANY REPRODUCTION WITHOUT THE WRITTEN PERMISSION OF MGS TECHNOLOGY IS PROHIBITED.

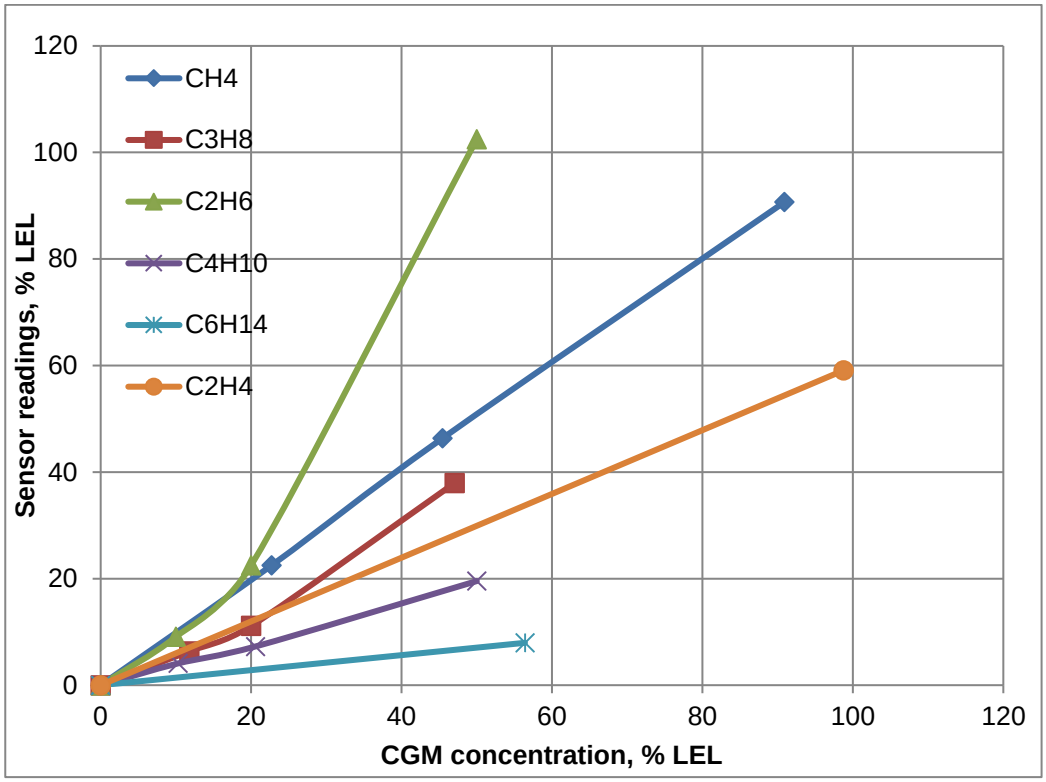


**Fig. 9. Typical sensitivity of MIPEX-02-4-X-X.1 X (target gas is $CH_4$/$CH_4$+$C_2H_6$ and calibration gas is $CH_4$) to other hydrocarbons**



THE SOLE PROPERTY OF MGS TECHNOLOGY. ANY REPRODUCTION WITHOUT THE WRITTEN PERMISSION OF MGS TECHNOLOGY IS PROHIBITED.

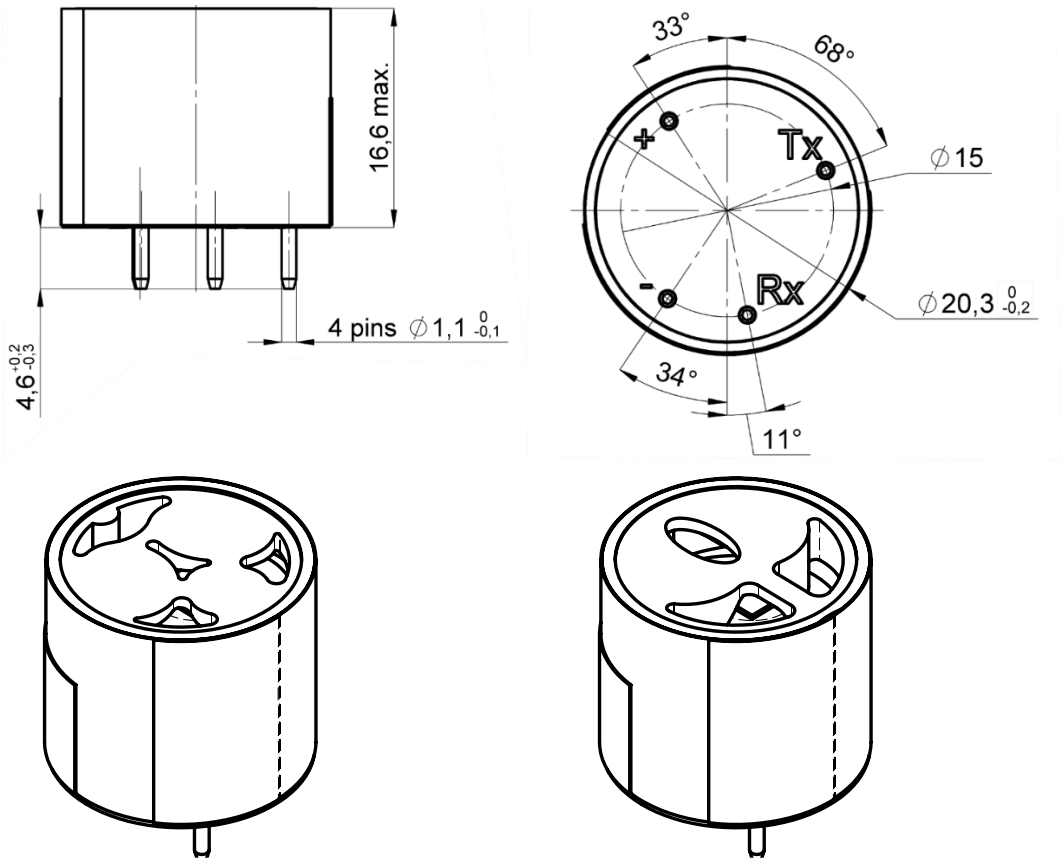


**Fig. 10. MIPEX-02-B-C-1.1 A (housing type “1”) overall dimensions in millimeters**



THE SOLE PROPERTY OF MGS TECHNOLOGY. ANY REPRODUCTION WITHOUT THE WRITTEN PERMISSION OF MGS TECHNOLOGY IS PROHIBITED.

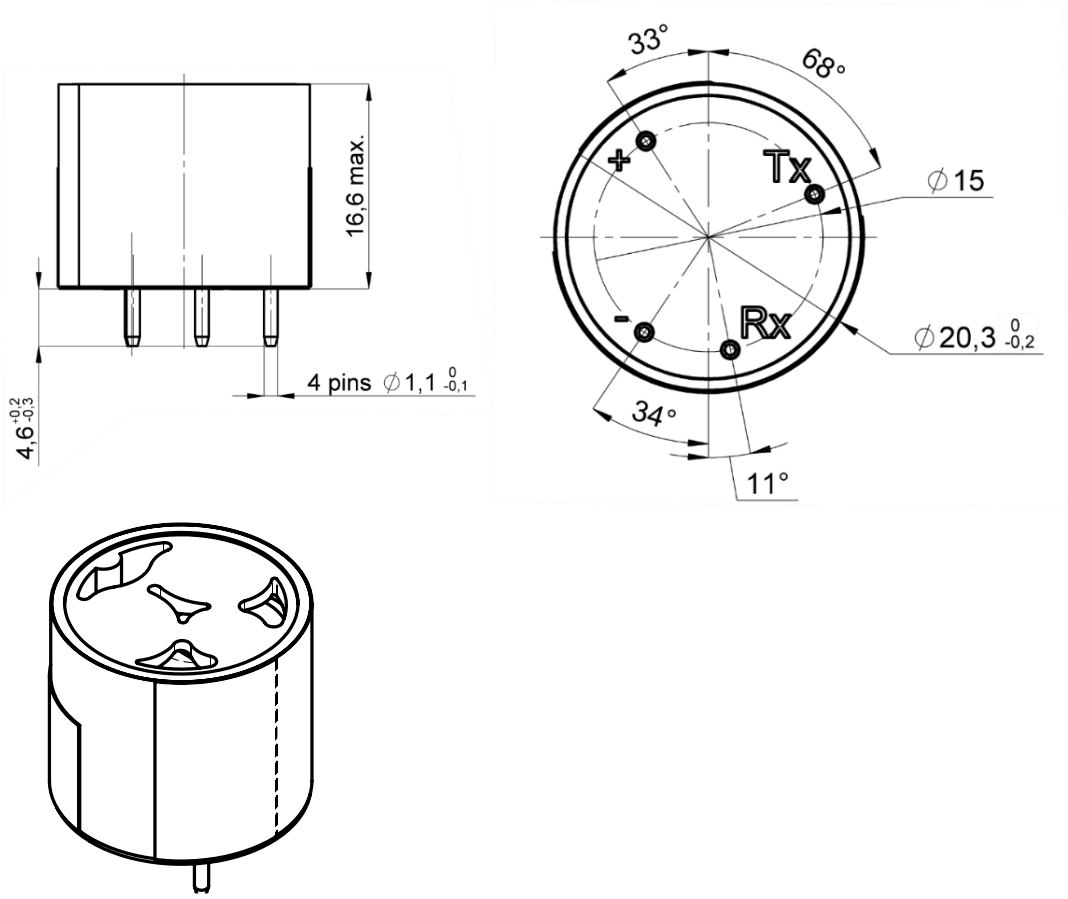


**Fig. 11. MIPEX-02-B-C-3.1 A (housing type “3”) overall dimensions in millimeters**

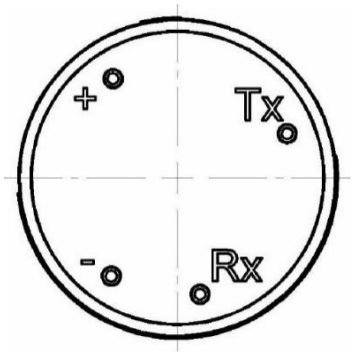


**Table 7. Sensor pinout**

| Pin | Purpose |
|---|---|
| **Tx** | UART, TxD output |
| **Rx** | UART, RxD input |
| **+** | $V_{dd}$ |
| **–** | GND |


THE SOLE PROPERTY OF MGS TECHNOLOGY. ANY REPRODUCTION WITHOUT THE WRITTEN PERMISSION OF MGS TECHNOLOGY IS PROHIBITED.

# APPENDIX B. CONNECTION DIAGRAM

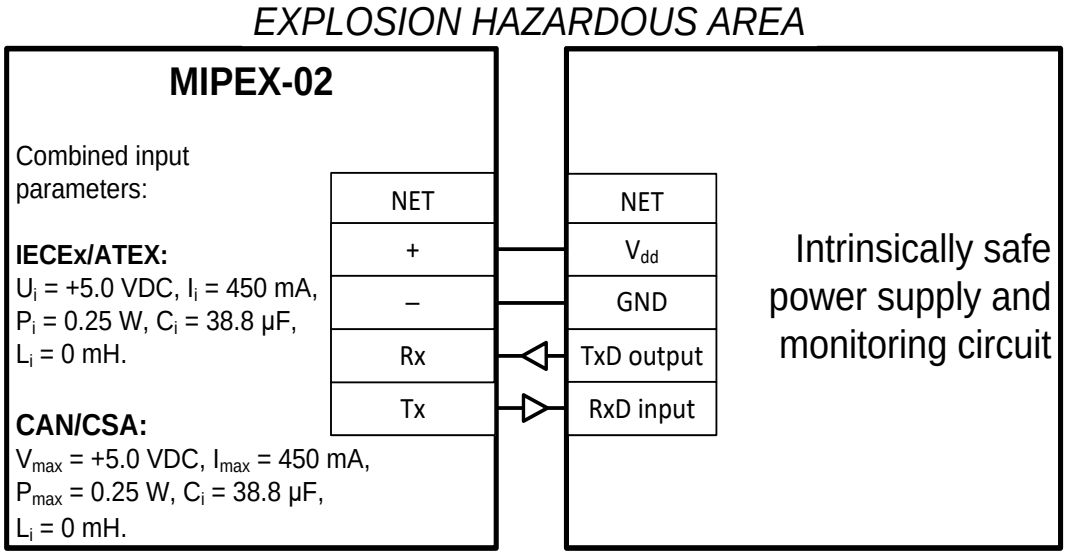


**Fig. 12. Connection diagram for MIPEX-02**


THE SOLE PROPERTY OF MGS TECHNOLOGY. ANY REPRODUCTION WITHOUT THE WRITTEN PERMISSION OF MGS TECHNOLOGY IS PROHIBITED.

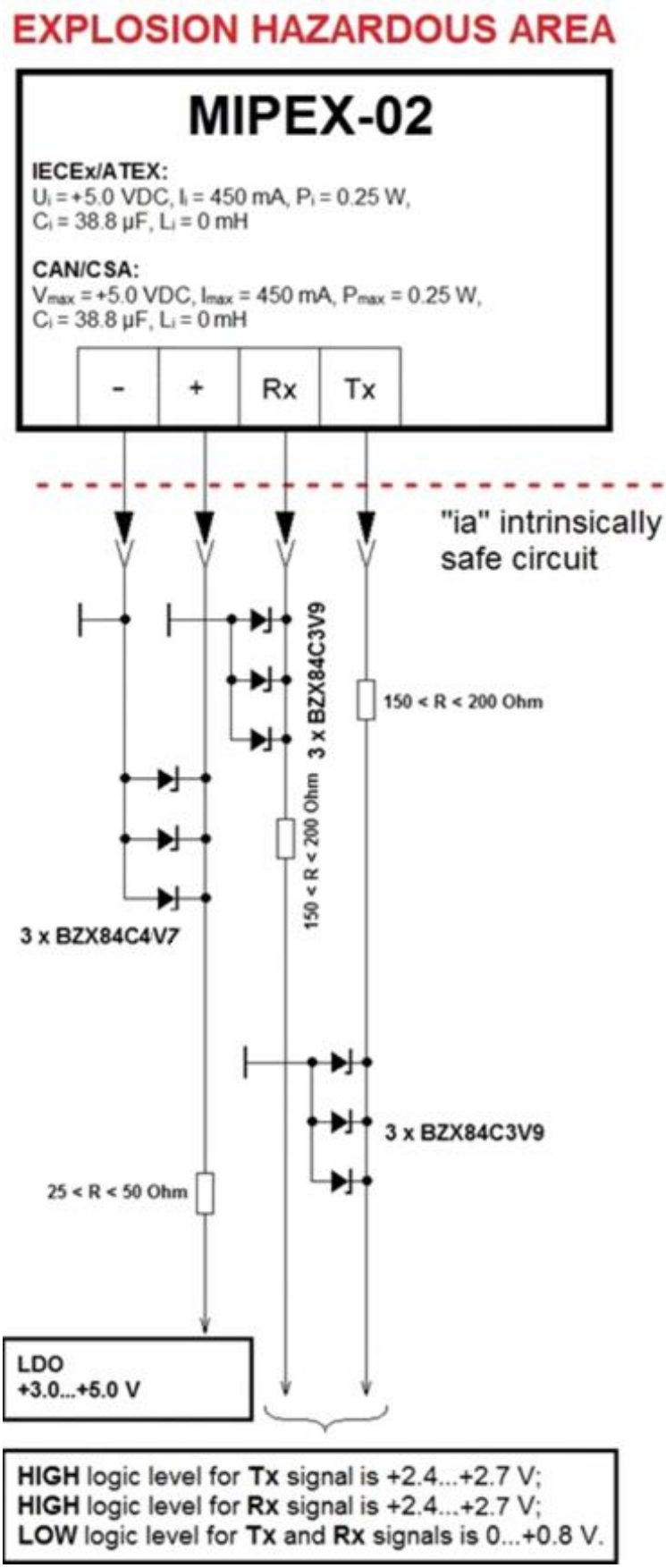


**Fig. 13. Example of connecting MIPEX-02 to "ia" intrinsically safe circuit**



THE SOLE PROPERTY OF MGS TECHNOLOGY. ANY REPRODUCTION WITHOUT THE WRITTEN PERMISSION OF MGS TECHNOLOGY IS PROHIBITED.

# APPENDIX C. UART COMMUNICATION PROTOCOL

Current manual describes firmware releases 25.6 and higher (used in hydrocarbon sensors), 24.6 (used in $CO_2$ sensors). Sensor communication protocol is based on UART interface. Contact support service for available compatible versions and instructions.

## Appendix C.1. General information

Data exchange with MIPEX-02 sensors is performed via UART interface:

- Sensor has symbol rate of 9600 baud.
- Data format: 8-bit message, 1 stop bit, no parity checking.
- Electrical parameters of UART are pointed in section 6.3.

**General command format:**

- any command stated in this UM as <X>, where X stands for a command text consisted of any number of characters, must be read and/or sent without the symbols “<” and “>”;
- ASCII code for commands and most responses;
- command ends with carriage return symbol (hex: “0D”);
- words and/or values in a response on most commands are separated by space symbol (hex: “20”) or in some cases by tabulation (hex: “09”);
- all symbols in command must be sent as one word without delays;
- sensor does not respond to incorrectly sent commands;
- sensor has two operating modes (access levels): “OEM” and “USER”; “OEM” has extended command set for developers, while “USER” mode is used for field operations;
- if sensor is used in combination with other devices on single UART line, then to refer to a specific sensor, before any command from the communication protocol must write prefix as “#XX”, where XX stands for sensor’s net address in hexadecimal format in range 00…FF. The assignment of the net address to the sensor is described in chapter 6.5. Example of writing the command #XXINDSIG ON and responding to this command #XXINDSIG ON OK.

When accessing the sensor using commands from the communication protocol for writing / rewriting data into the sensor's memory, do not turn off the sensor power supply within 2 seconds after the submission of the corresponding commands from the communication protocol.



THE SOLE PROPERTY OF MGS TECHNOLOGY. ANY REPRODUCTION WITHOUT THE WRITTEN PERMISSION OF MGS TECHNOLOGY IS PROHIBITED.

# Appendix C.2. Communication protocol commands

There are several types of commands used for communication with sensor:

1. commands for requesting measured data and diagnosing (see Appendix C.2.1);
2. commands for controlling operating mode (see Appendix C.2.2);
3. commands for requesting factory settings and properties (see Appendix C.2.3);
4. commands for sensor configuring and span calibration (see Appendix C.2.4);
5. commands for configuring net address (see Appendix C.2.5);

- Always check command syntax before sending. Commands that are not listed in this user manual are prohibited. Otherwise, it may result in malfunction of sensor.
- In earlier versions of the firmware, some commands are unavailable.

## Appendix C.2.1. Commands for requesting measured data

There are five commands available for user to request concentration value. Primary command to request measured data is <@*X> as it requires minimum power to process it.

| Request syntax | USER mode | OEM mode | Response description | Command description |
|---|---|---|---|---|
| @ | yes | yes | 2 bytes in binary format (see Table 8). | Returns sensor readings of scaled concentration $C_1$ (not periodically, single time only). |
| **@*X** | yes | yes | "@" symbol in ASCII format and 2 bytes in binary format (see Table 8). | Returns sensor readings of scaled concentration $C_1$ periodically (every [1.28 ± 0.065] × **X** sec), where **X** is a value within the range 0…9 in ASCII format). |
| **CCS** | yes | yes | 5 bytes in ASCII format and "0D" symbol. | Returns sensor current ambient temperature in Celsius degrees. |
| **CFS** | yes | yes | 5 bytes in ASCII format and "0D" symbol. | Returns sensor current ambient temperature in Fahrenheit degrees. |
| **CKS** | yes | yes | 5 bytes in ASCII format and "0D" symbol. | Returns sensor current ambient temperature in Kelvins. |
| **DATA** | yes | yes | 5 bytes in ASCII format and "0D" symbol (see Table 9). | Returns sensor readings of scaled concentration $C_1$. |
| **DATAE** | yes | yes | 4 bytes in binary format and "0D" symbol (see Table 10). | Returns sensors readings of scaled concentration $C_1$, **status byte** and CRC value. |
| **DATAE2** | yes | yes | 5 bytes in binary format and "0D" symbol (see Table 11). | Returns sensor readings of scaled concentration $C_1$, two **status bytes** and CRC value. |


THE SOLE PROPERTY OF MGS TECHNOLOGY. ANY REPRODUCTION WITHOUT THE WRITTEN PERMISSION OF MGS TECHNOLOGY IS PROHIBITED.

**Table 8. Structure of response on <@> and <@*X> commands**

| | Command <@> (hex: “40 0D”) | | Command <@*X> (hex: “40 2A X 0D”) | | |
|---|---|---|---|---|---|
| Byte number | 1 | 2 | 1 | 2 | 3 |
| Byte data[8] | $C_1H$ | $C_1L$ | @ (hex: “40”) | $C_1H$ | $C_1L$ |

**Table 9. Structure of response to <DATA> command**

| | Command <DATA> (hex: “44 41 54 41 0D”) | |
|---|---|---|
| Byte number | 1-5 | 6 |
| Byte data | $C_1$ | hex: “0D” |

**Table 10. Structure of response to <DATAE> command**

| | Command <DATAE> (hex: “44 41 54 41 45 0D”) | | | | |
|---|---|---|---|---|---|
| Byte number | 1 | 2 | 3 | 4 | 5 |
| Byte data[9] | $C_1H$ | $C_1L$ | StatusByte | CRC | hex: “0D” |

**Table 11. Structure of response to <DATAE2> command**

| | Command <DATAE2> (hex: “44 41 54 41 45 32 0D”) | | | | | |
|---|---|---|---|---|---|---|
| Byte number | 1 | 2 | 3 | 4 | 5 | 6 |
| Byte data[10] | $C_1H$ | $C_1L$ | StatusByteH | StatusByteL | CRC | hex: “0D” |

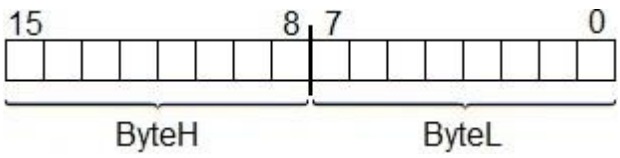


**Fig. 14. High and low bytes structure**

[8] High and low bytes structure is presented on Fig. 14.
[9] If bits of status byte are true, check their meanings in Table 12 and perform recommended operations.
[10] If bits of status bytes are true, check their meanings in Table 12 and perform recommended operations. High and low bytes structure is presented on Fig. 14.


THE SOLE PROPERTY OF MGS TECHNOLOGY. ANY REPRODUCTION WITHOUT THE WRITTEN PERMISSION OF MGS TECHNOLOGY IS PROHIBITED.

**Table 12. Bits of status bytes description**

| Bit number of <DATAE2> status-bytes | Bit number of <DATAE> status-byte | Description | Recommendations |
|---|---|---|---|
| – | – | Normal mode, static temperature | – |
| 0 | 0 | Sensor is warming up. | Do not perform span calibration. |
| 1 | 1 | An abrupt signal change (due to feeding a gas mixture to sensor atmosphere) or increased noise on sensor optical elements. | Do not perform span calibration or zeroing. If this status longer than for 20 minutes at stable conditions, replace sensor. |
| 2 | 2 | One of the signal values is lower than it is allowed. | Possibility of condensed moisture on optical elements. Dry sensor. After drying, if this status lasts longer than for 20 minutes at stable conditions, replace sensor. |
| 3 | 3 | reserved | Does not contain any significant information. |
| 4 | 4 | Dynamic temperature mode (temperature changes faster than by 0.6 °C/min). | Do not perform span calibration or zeroing. |
| 5 | 5 | Dynamic temperature mode (temperature changes faster than by 2 °C/min). | Do not perform span calibration or zeroing. |
| 6 | 6 | Exceeding temperature limits. | Check the ambient temperature. |
| 7 | 7 | Firmware failure (flash memory issues). | Contact support for details. |
| 8 | – | Data request rate is more than 1 Hz. | Do not perform span calibration or zeroing. Decrease request rate. |
| 9 | – | Zero shifts to negative value. | Possibility of condensed moisture on optical elements. Dry sensor. After drying, if this status lasts longer than for 20 minutes at stable conditions, perform zeroing (see Appendix D.1 for procedure description). |
| 10 | – | Sensor operates in low power consumption mode. | – |
| 11 | – | Complex status. Technological failure. | Contact support for details. |
| 12 | – | reserved | Does not contain any significant information. |
| 13 | – | reserved | Does not contain any significant information. |
| 14 | – | reserved | Does not contain any significant information. |
| 15 | – | reserved | Does not contain any significant information. |
| (4 v 5) & 9 | – | Dynamic temperature mode; zero shifts to negative value. | Do not perform span calibration or zeroing. |



THE SOLE PROPERTY OF MGS TECHNOLOGY. ANY REPRODUCTION WITHOUT THE WRITTEN PERMISSION OF MGS TECHNOLOGY IS PROHIBITED.

## Appendix C.2.2. Commands for controlling operating mode

| Request syntax | USER mode | OEM mode | Response description | Command description |
|---|---|---|---|---|
| **OEM XXXX** | yes | no | Response contains of word “OEM” or, if the password is incorrect, word “USER” in ASCII format and “0D” symbol. | Switches commands level from “USER” to “OEM”; **XXXX** stands for current password. Default password is 0000. |
| **PASS?** | no | yes | Response contains of 4 bytes in ASCII format and “0D” symbol. | Returns current password for switching commands level from “USER” to “OEM”. |
| **PASS XXXX YYYY** | no | yes | PASS XXXX YYYY OK<br>or<br>PASS XXXX YYYY FAULT | Intended for changing current password for switching commands level from “USER” to “OEM”. **XXXX** stands for old password and **YYYY** stands for new one. New password should contain only digits 0…9 in ASCII format. |
| **UART?** | yes | yes | USER<br>or<br>OEM | Returns active access level. |
| **USER** | no | yes | Response contains of word “USER” in ASCII format and “0D” symbol. | Switches commands level from “OEM” to “USER”. |

## Appendix C.2.3. Commands for requesting factory settings and properties

| Request syntax | USER mode | OEM mode | Response description | Command description |
|---|---|---|---|---|
| **ID?** | yes | yes | Summary info in ASCII format about sensor type, its serial number, characteristics and firmware version. | Returns sensor ID. |
| **RT?** | yes | yes | 5 bytes in ASCII format and “0D” symbol (the codes list is available upon query). | Returns sensor type. |
| **RX?** | yes | yes | 2 bytes in ASCII format and “0D” symbol. See Table 5 for details. | Returns sensor characteristics (temperature class, calibration range and accuracy). |
| **SRAL?** | yes | yes | 8 bytes in ASCII format and “0D” symbol. | Returns sensor serial number (SN). |
| **SREV?** | yes | yes | Sensor firmware version. | Returns the firmware version. |


THE SOLE PROPERTY OF MGS TECHNOLOGY. ANY REPRODUCTION WITHOUT THE WRITTEN PERMISSION OF MGS TECHNOLOGY IS PROHIBITED.

## Appendix C.2.4. Commands for sensor configuring and span calibrating

| Request syntax | USER mode | OEM mode | Response description | Command description |
|---|---|---|---|---|
| **AZERO?** | no | yes | AZERO ON<br>or<br>AZERO OFF | Intended for checking current auto-zeroing algorithm status (this algorithm must not be used on $CO_2$ sensors). |
| **AZERO OFF** | no | yes | AZERO OFF OK | Turns off the auto-zeroing algorithm. |
| **AZERO ON** | no | yes | AZERO ON OK | Turns on the auto-zeroing algorithm (this algorithm must not be used on $CO_2$ sensors). |
| **CALB AAAA** | no | yes | CALB AAAA OK<br>or<br>CALB AAAA FAULT | This command is used for gas span calibration, where **AAAA** is a CGM concentration value in % vol. × 100. For example, **AAAA** = 0198 corresponds to 1.98 % vol. See Appendix D.1 for detailed procedure description. |
| **CALB1 XXXXX** | no | yes | CALB1 XXXXX OK<br>or<br>CALB1 XXXXX FAULT | Writes scale coefficient for sensor calibration range of 0…5 % vol. **XXXXX** is the coefficient value incremented to 10000 (for example: to write the scale coefficient of 0.009 send <CALB2 00090>). This command can be used to recalibrate sensor if scale coefficient is known. The scale coefficients for different gases are individual for each sensor. To achieve cross-coefficients contact support. |
| **CALB2 YYYYY** | no | yes | CALB2 YYYYY OK<br>or<br>CALB2 YYYYY FAULT | Writes scale coefficient for sensor calibration range of 5…100 % vol. **YYYYY** is the coefficient value incremented to 10000 (for example: to store the scale coefficient of 0.01 send <CALB2 00100>). This command can be used to recalibrate sensor if scale coefficient is known. The scale coefficients for different gases are individual for each sensor. To achieve cross-coefficients contact support. |
| **CALB3 ZZZZZ** | no | yes | CALB3 ZZZZZ OK<br>or<br>CALB3 ZZZZZ FAULT | Writes scale coefficient for the whole sensor calibration range (0…100% vol.). **ZZZZZ** is the coefficient value incremented to 10000 (for example: to store the scale coefficient of 0.7 send <CALB3 07000>). This command can be used to recalibrate sensor if scale coefficient is known. The scale coefficients for different gases are individual for each sensor. To achieve cross-coefficients contact support. |


THE SOLE PROPERTY OF MGS TECHNOLOGY. ANY REPRODUCTION WITHOUT THE WRITTEN PERMISSION OF MGS TECHNOLOGY IS PROHIBITED.

| Request syntax | USER mode | OEM mode | Response description | Command description |
|---|---|---|---|---|
| **DATEZC?** | yes | yes | DD.MM.YY | Returns date of the last span calibration operation. |
| **DATEZC DD.MM.YY** | no | yes | DATEZC DD.MM.YY OK<br>or<br>DATEZC DD.MM.YY FAULT | Writes the last date of span calibration to sensor memory (DD – 00…31; MM – 0…12; YY – 00…99). |
| **INIT** | no | yes | INIT OK<br>or<br>INIT FAULT | Resets sensor to the factory calibration settings. It initializes zero and scale coefficients setting them to one (“1”). After sending this command, it is recommended to check sensor readings. In case if sensor does not comply to its metrological specifications, perform span calibration (see Appendix D.1) |
| **SETC XXXXX** | yes | yes | SETC XXXXX OK<br>or<br>SETC XXXXX FAULT | Intended for determining the current ambient temperature in Celsius degrees (XXXXX stands for degrees; i.e. 00023 = 23 °C). Sensor writes current temperature ADC value to its memory. |
| **UPLOAD** | no | yes | U_OK | By this command, sensor is set to firmware updating mode. This mode switches off automatically upon the firmware is updated. To switch it off manually reset sensor power supply. |
| **ZERO** | no | yes | ZERO OK<br>or<br>ZERO FAULT | Writes current temperature ADC value and ratio $S_t$ value to sensor controller memory by this command. |
| **ZERO0** | no | yes | ZERO0 OK<br>or<br>ZERO0 FAULT | Erases temperature coefficients previously defined by user. |
| **ZERO2** | no | yes | ZERO2 OK<br>or<br>ZERO2 FAULT | Intended for zeroing sensor. It initiates calculation and storing of the unifying zero coefficient within sensor memory. C and $C_1$ values are zeroed and ratio $S_{tz}$ becomes equal 1 by this command. |
| **INDSIG?** | yes | yes | INDSIG ON<br>or<br>INDSIG OFF | Intended for checking the current mode displaying of sensor status with negative values in concentration field. |


THE SOLE PROPERTY OF MGS TECHNOLOGY. ANY REPRODUCTION WITHOUT THE WRITTEN PERMISSION OF MGS TECHNOLOGY IS PROHIBITED.

| Request syntax | USER mode | OEM mode | Response description | Command description |
|---|---|---|---|---|
| **INDSIG OFF** | no | yes | INDSIG OFF OK | Turns off displaying of sensor status with negative values in concentration field. |
| **INDSIG ON** | no | yes | INDSIG ON OK | Turns on displaying of sensor status with negative values in concentration field (see Table 13). |
| **USERDATA?** | yes | yes | Contains 59 bytes of information and “0D” symbol. | Returns all the ten numbers contained in user section of sensor memory separated from each other with “0D” symbol. |
| **USERDATAXX?** | yes | yes | Contains 5 bytes of information and “0D” symbol | Returns a number contained in cell **XX** (00…09) of sensor memory user section. |
| **USERDATAXX YYYYY** | no | yes | USERDATAXX YYYYY OK | Writes a number **YYYYY** (00000…99999) to cell **XX** (00...09) of sensor memory user section. |

**Table 13. Negative values in concentration field while "INDSIG" mode is on**

| Concentration value in ASCII format | Concentration value in hex format | Description | Recommendations |
|---|---|---|---|
| -0001 | 8001 | Sensor is warming up. After power up, measured concentration value is displayed after 40 s, but sensor metrological properties are provided only after 120 s. | Do not perform span calibration. |
| -0002 | 8002 | Zero shifts to negative value. | Possibility of condensed moisture on optical elements. Dry sensor. After drying, if this status lasts longer than for 20 minutes at stable conditions, perform zeroing (see Appendix D.1 for procedure description). |
| -0003 | 8003 | Dynamic temperature mode; zero shifts to negative value. | Do not perform span calibration or zeroing. |


THE SOLE PROPERTY OF MGS TECHNOLOGY. ANY REPRODUCTION WITHOUT THE WRITTEN PERMISSION OF MGS TECHNOLOGY IS PROHIBITED.

## Appendix C.2.5. Commands for configuring net address

| Request syntax | USER mode | OEM mode | Response description | Command description |
|---|---|---|---|---|
| **!**** | no | yes | 4 bytes in ASCII format: “0D” symbol, sensor’s hexadecimal net address in range 00…FF and “0D” symbol. | Returns sensor’s net address |
| **%AABB** | no | yes | Three bytes in ASCII format: sensor’s new hexadecimal net address and “0D” symbol. | Intended to assign a new net address **AA** to sensor with address **BB**. |
| **NETOFF** | no | yes | NETOFF OK<br>or<br>NETOFF FAULT | Cancels storing of sensor’s net address in sensor memory. After sensor receives this command and sensor power resets, sensor’s net address becomes “00”. |
| **NETON** | no | yes | NETON OK<br>or<br>NETON FAULT | Allows assigning and storing sensor’s net address by using <%AABB> command. |


THE SOLE PROPERTY OF MGS TECHNOLOGY. ANY REPRODUCTION WITHOUT THE WRITTEN PERMISSION OF MGS TECHNOLOGY IS PROHIBITED.

# APPENDIX D. SENSOR CONFIGURATION

## Appendix D.1. Zeroing and span calibration

Span calibration is necessary during sensor's initial installation as well as during the period of preparation for the equipment checking. It is required to perform span calibration at least once in 30 months. Manual zeroing must be performed before span calibration, after prolonged storage without power supply, after transportation as well as after dust filter is applied. It is also recommended to perform manual zeroing when status-word "**31**" shows up (see Appendix F, Table 17 and Table 18). For the list of CGMs necessary for span calibration, see Table 14, Table 15 and Table 16.

1. Covering sensor diffusion holes increases response time (T90).
2. Before span calibration operation, it is recommended to send command <INIT> for calibration and zeroing coefficients initialization.
3. While span calibration is being carried out, avoid:
   - excessive pressure on sensor housing,
   - > 98% humidity,
   - pressure of flowing gas less than 99 kPa and more than 103 kPa;
   - temperature changes faster than by 0.6 °C/min,
   - dust ingress (if dust filter is not used),
   - data request rate more than 1 Hz.
4. Recommended gas feeding rate when using gas adapters ESAT.200210.00:
   - 100-150 mL/min for one sensor;
   - 500-600 mL/min for 50 consecutively connected sensors.
5. For $CO_2$ sensors perform zeroing manually at least once in 3 months.

Zeroing and span calibration should be carried out by qualified personnel outside of an explosive area under normal conditions in the following sequence:

1. Communicate sensor via UART interface (example based on MIPEX-02/03 interface board ESAT.200200.00 is shown on Fig. 15; gas adapter ESAT.200210.00 is available as an option).
2. Auto-zeroing procedure of sensor concentration readings starts automatically during sensor self-diagnostics after power is switched on. Sensor self-diagnostics runs constantly while power is on. Use the following commands to control the algorithm: <AZERO ON>, <AZERO OFF> and <AZERO?> (this algorithm must not be used on $CO_2$ sensors). However, if zero shifts anyway, it is recommended to **perform zeroing manually**:
   - 2.1. within 5 minutes after power was supplied start feeding CGM #1 (high purity nitrogen) into sensor atmosphere;
   - 2.2. one minute after CGM #1 was supplied, send command <ZERO2>; thus, sensor readings on the concentration will be set to zero;
   - 2.3. stop feeding CGM #1 into sensor atmosphere;
   - 2.4. manual zeroing complete.


THE SOLE PROPERTY OF MGS TECHNOLOGY. ANY REPRODUCTION WITHOUT THE WRITTEN PERMISSION OF MGS TECHNOLOGY IS PROHIBITED.

3. Start feeding CGM #2 into sensor atmosphere.
4. One minute after CGM #2 was supplied, send <CALB AAAA> command, where AAAA is a value of CGM concentration (e.g. value 0198 corresponds to 1.98% vol.). Thereafter scaled concentration value $C_1$ becomes equal to the sent value AAAA. Scale coefficient is stored in sensor microcontroller memory until the next span calibration. Before sending command <CALB AAAA>, ensure the following conditions:
   4.1. entered concentration value must not deviate from the current readings of more than 20 times and also must not be less than 11:
   $$(\mathrm{C} \cdot 20 > \mathrm{C}_1 > \mathrm{C} \cdot 0.05)\ \&\&\ \mathrm{C} > 10$$
   4.2. CGM must contain more than 0.2% vol. of target gas;
   4.3. if these conditions are not met, sensor responds “CALB AAAA FAULT”.
5. Stop feeding CGM #2 into sensor atmosphere.
6. Feed CGM #3 into sensor atmosphere and check sensor readings.
7. For methane sensors calibrated up to 100% vol. repeat the procedure steps 3, 4 and 5 with CGM #4.

If requirements to sensor readings variation are not met in accordance with Table 6, zeroing and span calibration procedure should be repeated. In case of the repeated mismatch between sensor readings and target gas concentration value in CGM #3, sensor should be sent to the manufacturer for repair or replacement.

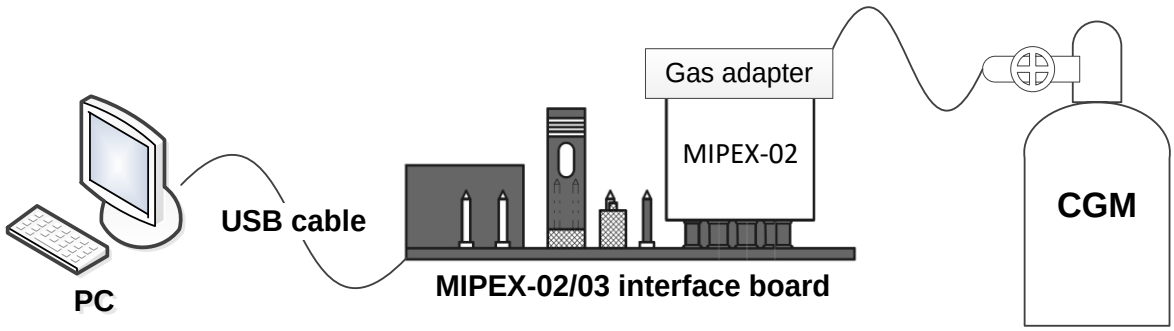


**Fig. 15. Typical scheme of MIPEX-02 span calibration**

Converting of <u>% vol.</u> to <u>% LEL</u> is performed according to the following equation:

$$\mathrm{LFSCL} = \frac{100 \times \mathrm{C}}{\mathrm{C(h)}},$$

where:

$\mathrm{LFSCL}$ is component concentration, % LEL;

$\mathrm{C}$ is component concentration, % vol.;

$\mathrm{C(h)}$ is the lower explosive limit of component, % vol. (constant);


THE SOLE PROPERTY OF MGS TECHNOLOGY. ANY REPRODUCTION WITHOUT THE WRITTEN PERMISSION OF MGS TECHNOLOGY IS PROHIBITED.

For methane $C(h) = 4.4\%$ vol.; for propane $C(h) = 1.7\%$ vol.

**Table 14. CGMs used for $CH_4$ span calibration**

| CGM number according to text | Components composition | Content of methane, % vol. (% LEL) | Permissible deviation limits, % vol. | Limits of permissible error of qualification, % vol. | A number as listed in the State Register or in the Standard designation |
|---|---|---|---|---|---|
| 1 | $N_2$ | 0 | – | – | ISO 2435-73 |
| 2 | $CH_4$, $N_2$ | 2.2 (50) | ±0.25 | ±0.04 | |
| 3 | $CH_4$, $N_2$ | 4.15 (94) | ±0.25 | ±0.04 | |
| 4 | $CH_4$, $N_2$ | 40 | ±2.5 | ±0.4 | |

**Table 15. CGMs used for $C_3H_8$ span calibration**

| CGM number according to text | Components composition | Content of propane, % vol. (% LEL) | Permissible deviation limits, % vol. | Limits of permissible error of qualification, % vol. | A number as listed in the State Register or in the Standard designation |
|---|---|---|---|---|---|
| 1 | $N_2$ | 0 | – | – | ISO 2435-73 |
| 2 | $C_3H_8$, $N_2$ | 0.85 (50) | ±0.05 | ±0.015 | |
| 3 | $C_3H_8$, $N_2$ | 1.6 (94) | ±0.1 | ±0.05 | |

**Table 16. CGMs used for $CO_2$ span calibration**

| CGM number according to text | Components composition | Content of carbon dioxide, % vol. | Permissible deviation limits, % vol. | Limits of permissible error of qualification, % vol. | A number as listed in the State Register or in the Standard designation |
|---|---|---|---|---|---|
| 1 | $N_2$ | 0 | – | – | |
| 2 | $CO_2$, $N_2$ | 0.7 | ±0.1 | ±0.015 | – |
| 3 | $CO_2$, $N_2$ | 1.3 | ±0.1 | ±0.05 | – |
| 4 | $CO_2$, $N_2$ | 2.5 | ±0.1 | ±0.05 | – |
| 5 | $CO_2$, $N_2$ | 4.9 | ±0.1 | ±0.05 | – |


THE SOLE PROPERTY OF MGS TECHNOLOGY. ANY REPRODUCTION WITHOUT THE WRITTEN PERMISSION OF MGS TECHNOLOGY IS PROHIBITED.

## Appendix D.2. Temperature dependence of zero adjustment

It is allowed for user to adjust the temperature dependence of zero. To do this split any temperature range into equal intervals about 12.5 °C each. Each interval is used for corresponding operating temperature. Then perform the operation accordingly to an example below.

An example of procedure for temperature range of -40…+60 °C:

1. Fill sensor atmosphere with nitrogen.
2. Power on the sensor.
3. 1 minute after, send <ZERO0> command. This command erases previously defined temperature coefficients.
4. Change temperature in the range of -40…+60 °C with a pitch of 12.5 °C. For each of 9 points of temperature range, lock the temperature for at least 20 minutes.
5. When temperature is stable, for each of 9 points of temperature range send <ZERO> command, by which a current temperature ADC value and ratio $S_t$ value (see Table 17) are written to sensor memory (see Fig. 16).

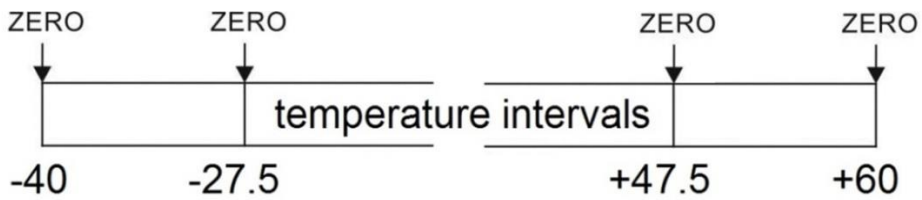


**Fig. 16. Scheme of adjusting the temperature coefficients**


THE SOLE PROPERTY OF MGS TECHNOLOGY. ANY REPRODUCTION WITHOUT THE WRITTEN PERMISSION OF MGS TECHNOLOGY IS PROHIBITED.

# APPENDIX E. DUST FILTER ATTACHING

To improve sensor operation reliability, dust filter should be attached to sensor surfaces. For sensor housing types “1” and “3”, only top filter (ESAT.100214.00; see Fig. 17) should be applied. Filters material is fluoroplastic membrane “Vladipor MFFC TC 6-55-221-1413-2004”. On the filter backside there is an adhesive layer “3M Double Linered Laminating Adhesive 7952” in hatched areas in Fig. 17.

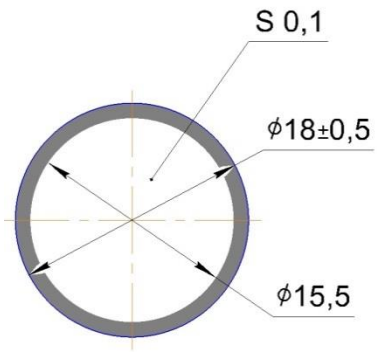


**Fig. 17. Top filter dimensions**

Perform the following steps to attach dust filter:

- Perform this work in a well-illuminated and well-ventilated area.
- Once a dust filter is attached to sensor surface, perform zeroing procedure (see Appendix D.1 for details).

1. Degrease surface of the upper side of sensor.
2. Extract filter from the packing and remove its substrate with tweezers.
3. Align the filter exactly to the center of the upper side of sensor with tweezers and then press on it.


THE SOLE PROPERTY OF MGS TECHNOLOGY. ANY REPRODUCTION WITHOUT THE WRITTEN PERMISSION OF MGS TECHNOLOGY IS PROHIBITED.

# APPENDIX F. TROUBLESHOOTING

If there is suspicion that sensor returns wrong data and / or operates improperly, it is necessary to check its status by sending command <DATAE2> (see Appendix C.2.1). It returns concentration value and two status bytes. If any bits of status bytes are true, check their meaning in Table 12 and follow to specified recommendations. If suspicion of error or status corresponding to error persists, please contact support.

Contacting support, send log file with periodic responses to command <F>, which is intended exclusively for detailed diagnostics. It returns comprehensive information on sensor readings and its status. Sensor power consumption stated in section 6.3 is not guaranteed while using this command. Command <F> returns 72 bytes in ASCII format and “0D” symbol. Unlike <DATAE2>, it returns status word whose value corresponds to certain combination of true status byte bits (see Table 12). Detailed description of command <F> is contained in Table 17.

Sending rate of <F> command should not be more than 1 Hz.

In case if status word value is stable, log file with few (approx. 10) responses is enough. In case if status word varies eventually or periodically, log file must contain sufficient number of responses obtained before status word occurs and in time of its occurrence.



THE SOLE PROPERTY OF MGS TECHNOLOGY. ANY REPRODUCTION WITHOUT THE WRITTEN PERMISSION OF MGS TECHNOLOGY IS PROHIBITED.

**Table 17. Structure of response to <F> command**

| **Command <F> (hex: “46 0D”) response** | | |
|---|---|---|
| Byte number | Byte data | Data description |
| 1 | Hex: “0E” | Special character |
| 2-6 | T | Sensor temperature expressed in ADC counts |
| 7 | Hex: “09” | Tabulation symbol |
| 8-12 | $S_t$ | The ratio $\frac{U_s}{U_{ref}}$ considering temperature correction |
| 13 | Hex: “09” | Tabulation symbol |
| 14-18 | $U_s$ | Operating signal in ADC counts |
| 19 | Hex: “09” | Tabulation symbol |
| 20-24 | $U_{ref}$ | Reference signal in ADC counts |
| 25 | Hex: “09” | Tabulation symbol |
| 26-30 | $S_{tz0}$ | The ratio $S_t$ considering ZERO and ZERO2 coefficients |
| 31 | Hex: “09” | Tabulation symbol |
| 32-36 | $S_{tz}$ | The ratio $S_{tz0}$ considering the drift compensation algorithm |
| 37 | Hex: “09” | Tabulation symbol |
| 38-42 | $S_{tzkt}$ | The ratio $S_{tz}$ considering the coefficient of temperature sensitivity |
| 43 | Hex: “09” | Tabulation symbol |
| 44-48 | C | Sensor readings on target gas concentration based on factory settings, % vol. × 100 |
| 49 | Hex: “09” | Tabulation symbol |
| 50-54 | $C_1$ | Scaled sensor readings on target gas concentration based on user settings, % vol. × 100 |
| 55 | Hex: “09” | Tabulation symbol |
| 56-60 | **Status word** | Status word (see Table 18 for details) |
| 61 | Hex: “09” | Tabulation symbol |
| 62-69 | S/N | Sensor serial number |
| 70 | Hex: “09” | Tabulation symbol |
| 71 | CRC | CRC calculated using “exclusive OR” method |
| 72 | Hex: “09” | Tabulation symbol |
| 73 | Hex: “0D” | Carriage return |


THE SOLE PROPERTY OF MGS TECHNOLOGY. ANY REPRODUCTION WITHOUT THE WRITTEN PERMISSION OF MGS TECHNOLOGY IS PROHIBITED.

**Table 18. Status word values description**

| Status word | Priority level[11] | Description | Recommendations |
|---|---|---|---|
| 00 | 12 (lowest) | Normal operating mode, temperature is static. | – |
| 10 | 2 | Sensor is warming up. | Do not perform span calibration. |
| 11 | 3 | Data request rate is more than 1 Hz. | Do not perform span calibration or zeroing. Decrease request frequency. |
| 21 | 10 | Dynamic temperature mode (temperature changes faster than by 0.6 °C/min). | Do not perform span calibration or zeroing. |
| 22 | 9 | Dynamic temperature mode (temperature changes faster than by 2 °C/min). | Do not perform span calibration or zeroing. |
| 24 | 7 | Dynamic temperature mode; zero shifts to negative value. | Do not perform span calibration or zeroing. |
| 30 | 4 | One of the signal values ($U_s$ or $U_{ref}$) is lower than it is allowed | Possibility of condensed moisture on optical elements. Dry sensor. After drying, if this status lasts longer than for 20 minutes at stable conditions, replace sensor. |
| 31 | 8 | Zero shifts to negative value. | Possibility of condensed moisture on optical elements. Dry sensor. After drying, if this status lasts longer than for 20 minutes at stable conditions, perform zeroing (see Appendix D.1 for procedure description). |
| 40 | 6 | Exceeding temperature limits. | Check the ambient temperature. |
| 50 | 11 | An abrupt signal change (due to feeding a gas mixture to sensor atmosphere) or increased noise on sensor optical elements. | Do not perform span calibration or zeroing.<br>If this status lasts longer than for 20 minutes at stable conditions, replace sensor. |
| 51 | 5 | Complex status. Technological failure. | Contact support for details |
| 90 | 1 (highest) | Firmware failure (flash memory issues). | Contact support for details |
| 1XX | – | Sensor operates in low power consumption mode. | – |

NOTE: If any status word value except “00” and “21” appears, metrological properties of sensor are not provided.

[11] Sensor condition is characterized by set of status word parameters. <F> command returns only one status word value in accordance with priority. To view all parameter values use command <DATAE2>.



THE SOLE PROPERTY OF MGS TECHNOLOGY. ANY REPRODUCTION WITHOUT THE WRITTEN PERMISSION OF MGS TECHNOLOGY IS PROHIBITED.